Table of Contents

I. NOTICE TO CONTRACTORS – REQUEST FOR BIDS 3
INTRODUCTION 3
GENERAL TERMS AND CONDITIONS OF THE REQUEST FOR BID 3
II. GENERAL PROVISIONS 5
SELECTED TERMS AND CONDITIONS OF THE CONTRACT 5
ADDITIONAL INFORMATION REQUESTED: 5
NONDISCRIMINATION CLAUSE: 5
INDEMNIFICATION AND HOLD HARMLESS 5
INSURANCE: 5
RIGHT OF REJECTION: 6
STANDARD FORMS: 6
ADVICE OF OMISSION OR MISSTATEMENT: 6
COST OF PREPARATION: 7
NOTIFICATION OF WITHDRAWAL OF BID: 7
APPLICABLE LAW AND VENUE: 7
COMPLIANCE WITH THE LAW: 7
RIGHTS TO PERTINENT MATERIALS: 7
CONFIDENTIALITY OF DOCUMENTS: 7
PRE-OPENING INQUIRES / RESPONSE: 7
BOND REQUIREMENTS: 8
COMPLETION OF WORK: 8
CHANGES IN WORK: 8
MEASUREMENT AND PAYMENT 14
PROJECT DESCRIPTION 15
WARRANTY 17
III. SPECIAL PROVISIONS 18
DEFINITIONS 18
REQUIRED LISTING OF PROPOSED SUBCONTRACTORS 18
EXECUTION OF CONTRACT 19
PROGRESS OF THE WORK AND TIME FOR COMPLETION 19
REGLATORY REQUIREMENTS 19
USE OF PREMISES 20

DAILY WORK HOURS 20
SAFETY AND PROTECTION 20
CONSTRUCTION PROCEDURES AND DETAILED ORDER OF WORK 20
ELECTRICAL WORK GENERAL REQUIREMENTS – SECTION 16010: 29
STADIUM FLOODLIGHTING – SECTION 16200: 29
IV. TECHNICIAL SPECIFICATIONS 31
SUBMITTAL CHECKLIST 62
V. PROPOSAL 65
VI . CONTRACT 70
Addendum A 73

I. NOTICE TO CONTRACTORS – REQUEST FOR BIDS

INTRODUCTION

The Paradise Recreation and Park District, herein referred to as PRPD or District, solicits interested and qualified contractors to submit bids for entering into an agreement for the purpose of reconstructing the Moore Road Ball Park Softball Field Lighting System located at 6705 Moore Road in Paradise, California.

Since 1948, the Paradise Recreation and Park District provides recreation facilities and programs to the residents of Paradise, the Butte Creek Canyon area, and the unincorporated communities of Magalia/Paradise Pines and Concow/Yankee Hill. The District serves 50,000 people living in a 170-square mile area and manages nearly 500 acres of park land and facilities.

GENERAL TERMS AND CONDITIONS OF THE REQUEST FOR BID

1. All bidders shall inspect the work site and conduct a field verification of the scope of work. Site address is: **6705 Moore Road, Town of Paradise, County of Butte, State of California**

2. A mandatory pre-bid meeting will be held onsite Wednesday August 18, 2021 at 10:00 a.m.. Site address is: **6705 Moore Road, Town of Paradise, County of Butte, State of California**

3. Sealed submittals, in three (3) copies marked "Moore Road Ball Park Softball Field Lighting Renovation"; must be received no later than 3:00 p.m., Local Time on Wednesday September 15, 2021 at:

   Paradise Recreation and Park District
   6626 Skyway
   Paradise, CA 95969
   Attention: Dan Efseaff, District Manager

4. Each bid must be accompanied by cash, a certified check, cashier's check, or a bid bond in favor of the Paradise Recreation and Park District in an amount equal to at least ten percent [10%] of the amount bid. Such guaranty to be forfeited should the bidder whom the contract is awarded fail to enter into the contract.

5. Any bid or addenda pertaining thereto received after the announced time and date for submittals, whether by mail or otherwise, will be rejected. It is the sole responsibility of the bidder for ensuring that their bids are received by PRPD before the deadline. PRPD reserves the right to request additional information at any time during the procurement process.

6. If you are an individual with a disability and require a reasonable accommodation, please notify PRPD at (530) 872-6393, three (3) working days prior to need.

7. Northing herein is intended to exclude any responsible firm or in any way restrain or restrict competition. On the contrary, all responsible contractors are encouraged to submit bids.

8. Selection may be made of one or more bidders deemed to be fully qualified and best suited among those submitting bids, on the basis of the factors involved in the Request for Bid, including price. Negotiations may then be conducted with the bidders so selected. Price shall be considered, but need not be the sole determining factor. After negotiations have been conducted with the bidders so selected, PRPD shall select the bidder which, in its opinion, has made the best responsive bid and award the contract to that bidder.

9. Information and/or factors gathered during interviews, negotiations, reference checks, and any other information or factors deemed relevant by PRPD, shall be utilized in the final award. The final award of a contract is subject to approval by the Paradise Recreation and Park District's Board of Directors.

10. Prevailing Wages: Bidders are hereby notified that pursuant to the provisions of Section 1720-1861 ET. Seq. of the State of California Labor Code, the Director of the State Department of Industrial Relations has ascertained the general prevailing rate of per diem wages and the rates for overtime and holiday work in the locality in which the work is to be performed for each craft, classification or type of workman needed, applicable as of the date of the Bid Advertisement, copies of which may be obtained online through the Department of Labor Statistics at http://www.dir.ca.gov/dlsr/pwd for any interested party, and in the case of a contract, a copy will be posted at the job site.

11. Any bid submitted MUST include the Signature Sheet which has been signed by an individual authorized to bind the bid. All bids submitted without such signature may be deemed non-responsive.

12. The Preliminary Bid Summary will be posted on the District website once all received bids have been opened: https://www.paradiseprpd.com/professional-consultants-and-contractors

13. Bids received after this time will be returned unopened. Bids shall be valid for sixty (60) calendar days after the bid opening date. Bids shall be submitted on the District's Bid Forms. No electronic or emailed bids will be accepted.

II. GENERAL PROVISIONS

SELECTED TERMS AND CONDITIONS OF THE CONTRACT

CONTRACTORS SUBMITTING BIDS MUST BE REGISTERED AS A CONTRACTOR WITH THE STATE OF CALIFORNIA:

Both contractor license classifications A and B are required to complete work but either classification can submit bids for the job as long as the other classification is included on the subcontractors list.

ADDITIONAL INFORMATION REQUESTED:

Please indicate if your company has been cited and/or fined within the last five (5) years by any Federal, State or Local regulatory agency. If so, please provide the following information:

a. Date
b. Identity of the agency issuing the citation or fine
c. Description of the violation
d. Final rulings of agency

NONDISCRIMINATION CLAUSE:

The company who is selected as the Contractor, as required by law, shall not discriminate against an employee or applicant for employment with respect to hire, tenure, terms, conditions or privileges of employment, or a matter directly or indirectly related to employment because of race, color, religion, national origin, age, sex, sexual preference, disability, height, weight, or marital status.

INDEMNIFICATION AND HOLD HARMLESS

The vendor who is selected as the Contractor shall, at its own expense, protect, defend, indemnify, save and hold harmless, the PRPD and its elected and appointed officers, employees, servants, and agents from any and all claims, damages, lawsuits, costs and expenses including, but not limited to, all costs from administrative proceedings, court costs and attorney fees that PRPD and its elected and appointed officers, employees, servants and agents may incur as a result of the acts, omissions or negligence of the Contractor or its employees, servants, agents or subcontractors that may arise out the agreement.

The Contractor's indemnification responsibility under this section shall include the sum of damages, costs and expenses which are in excess of the sum of damages, costs and expenses which are paid out on behalf of or reimbursed to PRPD, its officers, employees, servants and agents by the insurance coverage obtained and/or maintained by the Contractor.

INSURANCE:

The vendor shall purchase and maintain insurance not less than the limits set forth below. All coverages shall be with insurance companies licensed and admitted to do business in the State of

California and have a minimum A.M. Best Company's Insurance Reports rated of A or A- (Excellent)

a. Worker's Compensation Insurance including Employers Liability Coverage in accordance with all applicable Statutes of the State of California.

b. Commercial General Liability Insurance on an "Occurrence Basis" with limits of liability not less than $2,000,000 per occurrence and $2,000,000 aggregate combined single limit. Coverage shall include the following; (1) Contractual Liability; (2) Products and Completed Operations; (3) Independent Contractors Coverage; (4) Broad form General Liability endorsement or equivalent.

c. Motor Vehicle Liability Insurance, including California No-Fault Coverage, with limits of liability of not less than $2,000,000 per occurrence combined single limit Bodily Injury and Property Damage. Coverage shall include all owned vehicles, all non-owned vehicles, and all hired vehicles.

d. Additional Insured – Commercial General Liability Insurance, as described above, shall include an endorsement stating the following shall be "Additional Insured": The PRPD, all elected and appointed officials, all employees and volunteers, all boards, commissions and/or authorities and board members, including employees and volunteers thereof.

e. Cancellation Notice – All insurances described above shall include an endorsement stating the following: "It is understood and agreed that thirty (30) days advanced written notice of cancellation, non-renewal, reduction and/or material change shall be sent to: Paradise Recreation and Park District, 6626 Skyway, Paradise, CA 95969, Attention: Dan Efseaff."

f. Proof of Insurance – The vendor shall provide to PRPD at the time the contracts are returned by it for execution, two (2) copies of certificates of insurance for each of the policies mentioned above. If so requested, certified copies of all policies will be furnished.

RIGHT OF REJECTION:

PRPD reserves the right to reject any or all bids, to waive any informalities or irregularities in bids, and/or to negotiate separately the terms and conditions of all or any part of the bids as determined to be in PRPD's best interests at its sole discretion.

STANDARD FORMS:

Any preprinted contract form(s) the vendor proposes to include as part of the contract resulting from this bid must be submitted as part of the bid. Any standard contract provisions not submitted as part of the bid and subsequently presented for inclusion may be rejected. PRPD reserves the right to accept or reject in whole or in part any form contract submitted by a vendor and/or to require that amendments by made thereto, or that an agreement drafted by PRPD be utilized.

ADVICE OF OMISSION OR MISSTATEMENT:

In the event it is evident to a vendor responding to the RFB that PRPD has omitted or misstated a material requirement to this RFB and/or the services required by this RFB, the responding vendor

shall advise Kristi Sweeney, Assistant District Manager at (530) 872-6393 of such omission or misstatement.

COST OF PREPARATION:

PRPD will not pay any costs incurred in the bid preparation, printing or demonstration process. All costs shall be borne by the vendors.

NOTIFICATION OF WITHDRAWAL OF BID:

Bids may be modified or withdrawn prior to the date and time specified for this submission with a formal written notice by an authorized representative of the vendors. Bids submitted will become the property of PRPD after the bid submission deadline.

APPLICABLE LAW AND VENUE:

The agreement resulting from this RFB shall be construed according to the laws of the State of California. PRPD and vendors agree that the venue for any legal action under this agreement shall be the County of Butte, State of California.

COMPLIANCE WITH THE LAW:

Vendors shall render the services to be provided pursuant to this agreement in compliance with all applicable federal, state, and local laws, ordinances, rules, and regulations.

RIGHTS TO PERTINENT MATERIALS:

All responses, inquiries, and correspondence relating to this RFB and all reports, charts, displays, schedules, exhibits, and other documentation produced by the vendors that are submitted as part of the bid shall become the property of PRPD after the bid submission deadline.

CONFIDENTIALITY OF DOCUMENTS:

Submitted responses to the RFB shall be deemed confidential during the evaluation process. Vendor's bid will not be available for review by anyone other than the PRPD's Evaluation Team or its designated agents within the limits of PRPD's public disclosure requirements.

PRE-OPENING INQUIRES / RESPONSE:

Any explanation desired by a prospective vendor regarding the meaning or interpretation of a Request for Sealed Bids and any attachment(s) must be requested in writing and presented to PRPD. Written requests may be mailed or e-mailed to info@paradiseprpd.com. All requests for explanation or information must be received by Wednesday September 1, 2021. All responses shall be in writing and shall be furnished to all prospective vendors as an amendment to the RFB. Receipt of all amendments shall be acknowledged upon the bid by attachment thereto at the time of submission of bid. All amendments shall be signed and dated by the vendor. No oral explanation or instruction of any kind or nature whatsoever – given before the award of contract to a bidder – shall be binding.

BOND REQUIREMENTS:

Any proposal, if awarded, will be required to provide 100% of the contract amount coverage in a Performance Bond and Payment Bond. Bond must be with surety companies satisfactory to PRPD and who are listed in the Federal Register as published by the U.S. Department of Treasury under the most recently revised Circular. In addition, each surety company shall be admitted and licensed to do business in the State of California and have a minimum A.M. Best Company's Insurance Report Rating of A or A- (Excellent).

COMPLETION OF WORK:

The Contractor shall begin work within eight (8) calendar days after receiving a notice to proceed from PRPD. This work shall include the submittal to the Town of Paradise for a building permit, the ordering of any materials that my have extended lead time and any additional coordination efforts that may need to take place prior to the start of any work on the site. The contractor shall diligently prosecute the same to completion before the expiration of

75 WORKING DAYS

from the date of said NOTICE TO PROCEED. Working days include Monday through Friday between 7:00 a.m. and 7:00 p.m. excluding Holidays.

CHANGES IN WORK:

DISTRICT RIGHT TO DIRECT CHANGES:

The District, PRPD, at any time by written order may make Changes within the general scope of the work under the Contract Documents or issue additional instructions, require additional work, or direct deletion of work. The Contractor shall not proceed with any Change involving an increase or decrease in the Contract Price or the Contract Time without prior written authorization from PRPD. PRPD's right to make Changes shall not invalidate the Contract nor relieve the Contractor of any liability or other obligations under the Contract Documents. Changes to the work depicted or described in the specifications shall be subject to approval by the engineer.

CONTRACTOR NOTICE OF ORAL ORDER OF CHANGE IN WORK:

Any oral order, direction, instruction, interpretation, or determination from PRPD which in the opinion of the Contractor causes any change to the scope of work, or otherwise requires an adjustment to the Contract Price or the Contract Time, shall be treated as a Change in work only if the Contractor gives PRPD written notice, on supplied change order form, within ten (10) days of the order, directions, instructions, interpretation or determination and prior to acting in accordance therewith. Time is of the essence in Contractor's written notice pursuant to the preceding sentence so that PRPD can promptly investigate and consider alternative measures to address the order, direction, instruction, interpretation or determination giving rise to Contractor's notice. Accordingly, Contractor acknowledges that its failure, for any reason, to give written notice within ten (10) days of such order, direction, instruction, interpretation or determination shall be deemed Contractors waiver of any right to assert or claim any entitlement to an adjustment of the Contract Time or the Contract Price on account of such order, direction, instruction,

interpretation or determination. The written notice shall state the date, circumstances, extent of adjustment to the Contract Price or the Contract time, if any, requested, and the source of the order, direction, instruction, interpretation or determination that the Contractor regards as a Change. Unless the Contractor acts in strict accordance with this procedure, any such order, direction, instruction, interpretation or determination shall not be treated as a Change and the Contractor hereby waives any claim for any adjustment to the Contract Price or the Contract time on account thereof.

CONTRACTOR SUBMITTAL OF DATA:

Within ten (10) days after receipt of a written order directing a Change in the work or furnishing the written notice regarding any oral order directing a Change in work, the Contractor shall submit to PRPD a detailed written statement, on the supplied change order form, setting forth the general nature of the Change, the amount of any adjustment to the Contract Price on account thereof, properly itemized and supported by sufficient substantiating data to permit evaluation of the same, and the extent of adjustment of the Contract Time, if any, required by such Change. The Contractor's strict compliance with the foregoing is an express condition precedent to any right of the Contractor to adjustment of Contract Time or the Contract Price on account of Changes to work. No claim or adjustment to the Contract Price or the Contract Time shall be allowed if not asserted by the Contractor in strict conformity herewith or if asserted after Final Payment is made.

ADJUSTMENT TO CONTRACT PRICE AND CONTRACT TIME ON ACCOUNT OF CHANGES TO THE WORK:

Adjustments to the Contract Price due to Changes in the work shall be determined by the application of one of the following methods, in the following order of priority:

1. **Mutual Agreement** – By negotiation and mutual agreement, on a lump sum basis, between PRPD and the Contractor on the basis of the estimate of the actual and direct increase or decrease in costs on account of the Change. Within ten (10) days after issuance of written directive of PRPD directing or authorizing the Contract to commence with a Change to the work, the Contractor shall deliver to PRPD a detailed cost breakdown of the estimate of increase or decrease in costs directly associated with performance of the Change along with supporting data and documentation. The Contractor's estimate of increase or decrease in costs pursuant to the foregoing shall be in sufficient detail and in such form as to allow PRPD to review and assess the completeness and accuracy thereof. The Contractor shall be solely responsible for any additional costs or additional time arising out, or related in any manner to, its failure to provide the estimate of costs within the time specified in the request of PRPD for such estimate. If the Contractor fails or refuses to deliver to PRPD the Contractor Change Order Data, the Contractor shall be deemed to have waived any right to object to PRPD's determination of the extent of adjustment of the Contract Time of the Contract Price, provided that such determination is reasonable under the circumstances. In such event PRPD's determination shall be final, binding, and conclusive on the Contractor.

2. **Determination by PRPD** – PRPD, whether or not negotiations are initiated pursuant to the Mutual Agreement above, based upon actual and necessary costs incurred by the Contractor as determined by PRPD on the basis of the Contractor's records. In the event that the procedure set forth in the article is utilized to determine the extent of

adjustment to the Contract Price on account of Changes to the work, promptly upon determining the extent of adjustment to the Contract Price, PRPD shall notify the Contractor in writing of the same; the Contractor shall be deemed to have accepted PRPD's determination of the amount of adjustment to the Contract price on account of the Change to the work unless Contractor shall notify PRPD in writing, not more than fifteen (15) days from the date of PRPD's written notice, of any objection to PRPD's determination. Failure of the Contractor to timely notify PRPD of the Contractor's objections to the PRPD's determination of the extent of adjustment to the Contract Price shall be deemed Contractor's acceptance of PRPD's determination and a waiver of any right or basis of the Contractor to thereafter protest or otherwise object to PRPD's determination.

BASIS FOR ADJUSTMENT OF CONTRACT PRICE:

If Changes in the work require an adjustment of the Contract Price pursuant to adjustments listed above, the basis of adjustment for the Contract Price shall be as follows:

1. **Labor** – Contractor shall be compensated for the costs of labor actually and directly utilized in the performance of the Change. Such labor costs shall be limited to field labor for which there is a prevailing wage rate classification. Wage rates for the labor shall not exceed the prevailing wage rates in the locality of the site and shall be in the labor classifications necessary for the performance of the Change. Use of labor classification which would increase labor costs associated with any Change shall not be permitted.

2. **Materials and Equipment** – Contractor shall be compensated for the costs of materials and equipment necessarily and actually used or consumed in connection with the performance of Changes. Costs of materials and equipment may include reasonable costs of transportation from a source closest to the site of the work and delivery to the site. If discounts by Material Suppliers are available for materials necessarily used in the performance of Changes, they shall be credited to PRPD. If materials and/or equipment necessarily used in the performance of Changes are obtained from a supplier or source owned in whole or part by the Contractor, compensation therefore shall not exceed the current wholesale price for such materials or equipment. If, in reasonable opinion of PRPD the costs asserted by the Contractor for materials and/or equipment in connection with any Change is excessive, or if the Contractor fails to provide satisfactory evidence of the actual costs of such from its supplier or vendor, the cost of such materials and/or equipment and PRPD obligation for payment of the same shall be limited to the lowest wholesale price at which similar materials and/or equipment are available in the quantities required to perform the Change. PRPD may elect to furnish materials and/or equipment for Changes, in which event the Contractor shall not be compensated for the costs of furnishing such materials or any mark-up thereon.

3. **Construction Equipment** – Contractor shall be compensated for the actual cost of the necessary and direct use of construction equipment in the performance of Changes of work. Use of such construction equipment in the performance of Changes to the work shall be compensated in increments of fifteen (15) minutes. Rental time for construction equipment moved by its own power shall include time required to move

such equipment to the site of the work from the nearest available rental source of the same. If construction equipment is not moved to the site by its own power, Contractor will be compensated for the loading and transportation costs in lieu of rental time. The foregoing notwithstanding, neither moving time or loading and transportation time shall be allowed if the construction equipment is used for performance of any portion of the work other than changes to the work. Unless prior approval in writing is obtained by PRPD, no costs or compensation shall be allowed for time while Construction Equipment is inoperative, idle or on standby, for any reason. The Contractor shall not be entitled to an allowance or any other compensation for construction equipment or tools used in the performance of Changes to the work where such construction equipment or tools have a replacement value of One Thousand Dollars ($1,000.00) or less. Construction equipment costs claimed by the Contractor in connection with the performance of any Change to the work shall not exceed rental rates established by distributors or construction equipment rental agencies in the locality of the site; any costs asserted which exceed such rental rates shall not be allowed or paid. Unless otherwise specifically approved in writing by PRPD, the allowable rate for the use of construction equipment in connection with Changes to the work shall constitute full compensation to the Contractor for the cost of rental , fuel, power, oil, lubrication, supplies, necessary attachments, repairs or maintenance of any kind, depreciation, storage, insurance, labor (exclusive of labor costs of the construction equipment operator), and any other costs incurred by the Contractor incidental to the use of such construction equipment.

4. **Mark-up Costs of Changes to the Work** – In determining the cost to PRPD and the extent of increase to the Contract Price resulting from a Change adding to the Work, the allowance for mark-ups on the costs of the Change for all overhead (including home office and field overhead), general conditions costs and profit associated with the Change shall not exceed 15 percent, regardless of the number of Subcontractors, of any tier, performing any portion of any Change to the work. If a Change to the work reduces the Contract Price, no profit, general conditions or overhead costs shall be paid by the District to the Contractor for the reduced or deleted Work. In such event, the adjustment to the Contract Price shall be the actual cost reduction realized by the reduced or deleted Work.

5. **Contractor Maintenance of Records** – In the event that Contractor shall be directed to perform any Changes to the Work pursuant to the District Right to Direct Changes or the Contractor Notice of Oral Order of Change in the Work, or should the Contractor encounter conditions which the Contractor, pursuant to the Contractor Notice of Changes, believes would obligate the District to adjust the Contract Price and/or the Contract Time.

   Contractor shall maintain detailed records itemizing each element of costs along with substantiating evidence of costs incurred on a daily basis. Such records shall include without limitation hourly records for labor and construction equipment and itemized records of materials and equipment used that day in connection with the performance of any Change to the work. In the event that more than one Change to the work is

performed by the Contractor in a calendar day, Contractor shall maintain separate records of labor, construction equipment, materials and equipment for each such Change. In the event that any Subcontractor, of any tier, shall provide or perform any portion of any Change to the Work, Contractor shall require that each such Subcontractor maintain records in accordance with this Article. Each daily record maintained hereunder shall be signed by Contractor's Superintendent or Contractor's authorized representative; such signature shall be deemed Contractor's representation and warranty that all information contained therein is true, accurate, and complete and relate only to the Change referenced therein. All records maintained by a Subcontractor, of any tier, relating to the costs of a Change to the Work shall be signed by such Subcontractor's authorized representative or Superintendent. All records maintained hereunder shall be subject to inspection, review and/or reproduction by PRPD upon request. In the event that Contractor shall fail or refuse, for any reason, to maintain or make available for inspection, review and/or reproduction such records and the adjustment to the Contract Price on account of any Change to the Work is determined pursuant to this Article, PRPD's reasonable good faith determination of the extent of adjustment to the Contract Price on account of such Change shall be final, conclusive, dispositive and binding upon the Contractor. Contractor's obligation to maintain records hereunder is in addition to, and not in lieu of, any other Contractor obligation under the Contract Documents with respect to Changes to the Work.

ADJUSTMENT TO CONTRACT TIME

In the event of any Change(s) to the Work pursuant to this Article, the Contract Time shall be extended or reduced by Change Order for a period of time commensurate with the time reasonable necessary to perform such Change. In the event that any Change shall require an extension of the Contract Time, the Contractor shall not be subject to Liquidated Damages for such period of time. If completion of the work is delayed by causes for which PRPD is responsible and the delay is unreasonable under the circumstances involved, and not within the contemplation of the Contractor and PRPD at the time of execution of the Agreement, the Contractor shall not be precluded from the recovery of damages arising there from.

ADDITION OR DELETION OF ALTERNATE BID ITEM(S)

If the Bid for the Work includes a proposal(s) for Alternate Bid Item(s), during Contractor's performance of the Work, PRPD may elect, pursuant to this Article to add any such Alternate Bid Item(s) if the same did not form a basis for award of the Contract or delete any such Alternate Bid Item(s) if the same formed a basis for award of the Contract. If the District elects to add or delete any such Alternate Bid Item(s) pursuant to the foregoing, the cost or credit for such Alternate Bid Item(s) shall be as set forth in the Contractor's Bid. If any Alternate Bid Item is added or deleted from the Work pursuant to the foregoing, the Contract Time shall be adjusted by the number of days allocated for the added or deleted Alternate Bid Item in the Contract Documents; if days are not allocated for any Alternate Bid Item added or deleted pursuant to the foregoing, the Contract Time shall be equitable adjusted to the extent that the addition or deletion of an Alternate Bid Item actually affects Work on the critical path of the Progress Schedule as of the date of the upon which an Alternate Bid Item is added to or deleted from the Work.

CHANGE ORDERS

If the PRPD approves of a Change, a written Change Order prepared by the Engineer on behalf of the PRPD shall be forwarded to the Contractor describing the Change and setting forth the adjustment to the Contract Time and the Contract Price, if any, on account of such Change. All Change Orders shall be in full payment and final settlement of all claims for direct, indirect, and consequential costs, including without limitation, costs of delays or impacts related to, or arising out of, items covered and affected by the Change Order, as well as any adjustments to the Contract time. Any claim or item relating to any Change incorporated into a Change Order not presented by the Contractor for inclusion in the Change Order shall be deemed waived. The Contractor shall execute the Change Order prepared pursuant to the foregoing; once the Change Order has been prepared and forwarded to the Contractor for execution, without the prior approval of PRPD which may be granted or withheld in the sole and exclusive discretion of PRPD, the Contractor shall not modify or amend the form or content of such Change Order, or any portion thereof. The Contractor's attempted or purported modification or amendment of any such Change Order, without the prior approval of PRPD, shall not be binding upon PRPD; any such unapproved modification or amendment to such Change Order shall be null, void, and unenforceable. Unless otherwise expressly provided for in the Contract Documents or in the Change Order, any Change Order issued hereunder shall be binding upon the District only upon action of the District's Board of Directors or assigned contract officer approving and ratifying such Change Order. In the event of any amendment or modification made by the Contractor to a Change Order for which there is no prior approval by PRPD, in accordance with the provisions of this Article, unless otherwise expressly stated in its approval and ratification of such Change Order, any action of PRPD to approve and ratify such Change Order shall be deemed to be limited to the Change Order as prepared by the Engineer; such approval and ratification of such Change Order shall not be deemed PRPD's approval and ratification of any unapproved amendment or modification by the Contractor to such Change Order.

CONTRACTOR NOTICE OF CHANGES

If the Contractor should claim that any instruction, request, the Drawings, the Specifications, action, condition, omission, default, or other situation obligates PRPD to increase the Contract Price or to extend the Contract Time, the Contractor shall notify PRPD in writing, of such claim within ten (10) days from the date of its actual or constructive notice of the factual basis supporting the same. PRPD shall consider any such claim of the Contractor only if sufficient supporting documentation is submitted with the Contractor's notice to the PRPD. Time is if the essence in Contractor's written notice pursuant to the preceding sentence so that PRPD can promptly investigate and consider alternative measures to address such instruction, request, Drawings, Specifications, action, condition, omission, default, or other situation. Accordingly, Contractor acknowledges that its failure, for any reason, to give written notice (with sufficient supporting documentation to permit the PRPD's review and evaluation) within ten (10) days of its actual or constructive knowledge of any instruction, request, Drawings, Specifications, action, condition, omission, default, or other situation for which the Contractor believes there should be an adjustment of the Contract Time or the Contract Price shall be deemed Contractor's waiver, release, discharge and relinquishment of any right to assert or claim any entitlement to an adjustment of the Contract Time or the Contract Price on account of any such instruction, request, Drawings, Specifications, action, condition, omission, default, or other situation. In the event that the PRPD determines that the Contract Price or the Contract time are subject to adjustment based

upon the events, circumstances and supporting documentation submitted with the Contractor's written notice under this Article, any such adjustment shall be determined in accordance with the provisions of this section.

DISPUTED CHANGES

In the event of any dispute or disagreement between the Contractor and PRPD regarding the characterization of any item as a Change to the Work or as to the appropriate adjustment of the Contract Price or the Contract Time on account thereof, the Contractor shall promptly proceed with the performance of such item of the Work, subject to a subsequent resolution of such dispute or disagreement in accordance with the terms of the Contract Documents. The Contractor's failure or refusal to so proceed with such Work is the Contractor's default of a material obligation of the Contractor under the Contract Documents.

UNAUTHORIZED CHANGES

Any work beyond the extent of Work shown on the Contract Documents, or any Work performed or provided by the Contractor without notice to PRPD in the manner and within the time set forth in this section shall be considered unauthorized and at the sole expense of the Contractor. Work so done will not be measured or paid for, no extension to the Contract Time will be granted on account thereof and any such Work may be ordered removed at the Contract's sole cost and expense. The failure of PRPD to direct or order removal of such Work shall not constitute acceptance or approval of such Work nor relieve the Contractor from any liability on account thereof.

MEASUREMENT AND PAYMENT

PARTIAL PAYMENT

Once a month the Contractor will submit to PRPD a partial payment estimate filled out and signed by the Contractor covering the Work performed during the period covered by the partial payment estimate and supported by such data as PRPD may reasonable require. Prevailing wage certified payroll must be submitted with the partial payment estimate. If payment is requested on the basis of materials and equipment not incorporated in the Work but delivered and suitable stored at or near the site, the partial payment estimate shall also be accompanied by such supporting data, such as paid invoices, or other written evidence satisfactory to PRPD; as will establish PRPD title to the material and equipment and protect PRPD's interest therein, including applicable insurance. PRPD will, within thirty (30) days of presentation of an approved partial payment estimate, pay the Contractor a progress payment on the basis of the approved partial payment estimate less the retainage. The retainage shall be an amount equal to 10% of said estimate.

FINAL PAYMENT

Upon completion and acceptance of the Work, the Engineer shall issue a certificate attached to the final payment request that the Work has been accepted under the conditions of the Contract Documents. The entire balance found to be due the Contractor, including the retained percentages, but except such sums as may be lawfully retained by PRPD, shall be paid to the Contractor thirty

(30) days after the timely recoding of a Notice of Completion, or within ninety (90) days after completion and acceptance of the Work, whichever is earlier.

If is mutually agreed between the parties to the contract that no certificate given or payments made under the contract, except the final certificate or final payment, shall be conclusive evidence of the performance of the contract, either wholly or in part, against any claim of the party of the first part, and no payment shall be construed to be an acceptance of any defective work or improper materials.

And the Contractor further agrees that the payment of the final amount due under the contract, and the adjustment and payment for any work done in accordance with any alterations of the same, shall release PRPD and the Engineer from any and all claims or liability on account of work performed under the contract or any alteration thereof.

PROJECT DESCRIPTION

The District solicits interested and qualified contractors to submit bids to enter into an agreement to construct a new lighting system for the softball field at the Moore Road Ball Park as required by accompanying specifications.

Work required under this solicitation includes supplying all material and labor to design appropriate engineering plans and to supply all the material and labor to install the proposed improvements as specified in this document.

EXISTING LIGHTING SYSTEM:

A new main switchboard was futured in for the Softball Field Lighting Renovation project in 2014 though the District was unable to proceed with softball field light renovation at that time due to budget constraints. Addendum A provides electrical engineering documents related to the Moore Rd Ball Park Baseball Field Lighting Renovation project in 2014. Old wooden poles and fixtures were removed in April 2021.

NEW LIGHTING PERFORMANCE REQUIREMENTS

The District seeks high quality lighting to meet or exceed standards for recreational and high school sport play in accordance with the Illuminating Engineering Society of North America (IESNA) RP-6-15 Recommended Practice for Sports Lighting.

Area of Lighting	Light Level	Uniformity	# of Points	Size of Area	Grid Spacing
Softball Field (infield)	50 footcandles	2.0:1	25	250’ Radius	20’ x 20’
Softball Field (outfield)	30 footcandles	2.5:1	119	250’ Radius	20’ x 20’

In addition, as part of District efforts to meet conservation and cost reduction goals, lighting should be energy efficient, decreasing energy use from HID by at least 50%. The installation should include a programmable timer and options for remote access and programming.

SPILL AND GLARE ANALYSIS

The District is mindful of impacts to neighbors and the night sky in this rural area. Therefore, the project will abide by dark sky designs that minimize impacts and will have a horizontal spillover of 1.0-fc or less across any property lines.

Submitted spill/glare computer models shall depict the field test stations at the property line around the field. The test stations shall be shown every 30" at 150" around the perimeter of the field with the field lights on. Bidder shall submit, as described below:

Measure	Average	Maximum
Vertical Footcandles	0.05 fc	0.40 fc
Horizontal Footcandles	0.01 fc	0.18 fc
Candela Per Fixture	1600 Cd	5200 Cd

MATERIALS:

1. Pole Structural Steel

a. The pole shafts shall be high strength low alloy tapered tubular steel that is equal to current ASTM A595 standards, with galvanized coating inside and out. All connections of pole sections shall be by slip fitting the top section over the lower section by a length of at least 1.5 times the diameters.

b. Steel components of the poles shall be hot dip galvanized to current ASTM A-123. Steel portions of the pole shall be constructed such that all segments of the pole can be readily heated to like temperatures in commercially available galvanizing methods.

c. To avoid problems of galvanize adherence to differing steel alloys, all steel components used for the pole must be of the same type steel.

d. All exposed steel components of the pole shall be at least 18" above the surface of the ground to avoid exposure of the steel to moisture and oxygen in the air and soil. A cap must cover the top of the pole so that rain will not enter the interior of the pole.

e. To avoid stress corrosion of the pole, there must be no weld points of the steel portion of the pole within 18" of the ground. The pole shall be galvanized steel.

f. Poles used in the project must be designed to withstand 95 mph winds based upon CBC-C standards.

2. Foundation Design

a. The pole manufacturer shall provide a stamped foundation design, prepared by a Structural Engineer, licensed in the State of California. No direct burial steel poles allowed.

b. The foundation design must meet or exceed requirements for soils described as a Class 5 material as defined by the 2019 CBC Table.

c. Lighting Protection: Pole manufacturer or contractor must provide integrated lightning grounding as required by NFPA 780 and UL Listed per UL 96 and UL 96A.

d. LED lighting fixtures are required with average kWh consumption not to exceed 18 for the entire facility.

WARRANTY

MANUFACTURER PREVENTATIVE AND SPOT MAINTENANCE

Manufacturer of lighting systems shall provide all preventative spot maintenance, including parts and labor for a minimum of 10 years from the date of equipment shipment. Individual lamp outages shall be repaired when the usage of any field is materially impacted. Manufacturer shall maintain specifically-funded financial reserves to assure fulfillment of the warranty for the full term. Warranty need not cover weather events such as lightning or hail damage, improper installation, vandalism abuse, or product made by other manufacturers.

CONTRACTOR WARRANTY

If, within one year after the date of Substantial Completion of the Work or by terms of any applicable special warranty required by the Contract Documents, any of the Work is found to be not in accordance with the requirements of the Contract Documents, the Contractor shall correct it promptly after receipt of notice from the Owner to do so, unless the Owner has previously given the Contractor a written acceptance of such condition. The Owner shall give such notice promptly after discovery of the condition. During the one-year period for correction of Work, if the Owner fails to notify the Contractor and give the Contractor an opportunity to make the correction, the Owner waives the rights to require correction by the Contractor and to make a claim for breach of warranty.

III. SPECIAL PROVISIONS

DEFINITIONS

The work embraced herein shall be done in accordance with the appropriate provisions of the specifications entitled State of California, Department of Transportation, Standard Specifications 2018 and as revised, which specifications are hereinafter referred to as the Standard Specifications, and the County of Butte and Town of Paradise Design Criteria and Improvement Standards, insofar as the same may apply, and in accordance with the following special provisions.

Whenever in the Standard Specifications the following terms are used, they shall be understood to mean and refer to the following:

PRPD - Paradise Recreation and Park District (PRPD) or their authorized agents.

Contract Officer - Dan Efseaff, District Manager, or PRPD authorized agents.

Other terms appearing in the Standard Specifications, the General Provisions, and these Special Provisions, shall have the intent and meaning specified in Definition of Terms of the Standard Specifications.

In case of conflict between the Standard Specifications and these Special Provisions, the Special Provisions shall take precedence over and be used in lieu of such conflicting portions.

REQUIRED LISTING OF PROPOSED SUBCONTRACTORS

The third paragraph of section 8.01.01, "Subcontracting," of the state Standard Specifications shall not apply. The Contractor shall not be required to perform at least 50% of the original total contract price with his own organization.

Each proposal shall have listed therein the name and address of each subcontractor, the associated bid item numbers, and the dollar value of the subcontractors work to whom the bidder proposes to subcontract portions of the work, in accordance with the Subletting and Subcontracting Fair Practices Act, commencing with Section 4100 of the Public Contract Code. The list shall include all subcontractors regardless of the value of the subcontract amount. The bidder's attention is invited to other provisions of said Act related to the imposition of penalties for failure to observe its provisions by using unauthorized subcontractors or by making unauthorized substitutions.

A sheet for listing the subcontractors, as required herein is included in the Proposal. If there will be no subcontractors, enter "None" on the subcontractor's listing sheet.

EXECUTION OF CONTRACT

The contract shall be signed by the successful bidder and returned, together with the contract bonds, within **eight (8) days**, not including Sundays, after the bidder has received notice that the contract has been awarded. No proposal shall be considered binding upon the PRPD until the execution of the contract.

Failure to execute a contract and file acceptable bonds, as provided herein within **eight (8) days**, not including Sundays, after the bidder has received notice that the contract has been awarded, shall be just cause for the annulment of the award and the forfeiture of the proposal guaranty.

PROGRESS OF THE WORK AND TIME FOR COMPLETION

The Contractor shall begin work within eight (8) calendar days after receiving a notice to proceed from PRPD. This work shall include the submittal to the Town of Paradise for a building permit, the ordering of any materials that may have an extended lead time and any additional coordination efforts that may need to take place prior to the start of any work on the site. The contractor shall diligently prosecute the same to completion before the expiration of

75 WORKING DAYS

from the date of said NOTICE TO PROCEED. Working days include Monday thru Friday *between 7 a.m. and 7 p.m.* excluding Holidays.

REGLATORY REQUIREMENTS

1. Conform to all applicable codes for construction of the lighting system and installation of all site improvements.

2. The Contractor shall comply with all applicable Federal, State and local laws, ordinances, rules and regulations pertaining to the performance of the work specified herein.

3. If applicable, the Contractor shall obtain all permits, licenses, and certificates, or any such approvals of plans or specifications as may be required by Federal, State and local laws, ordinances, rules and regulations for the proper execution and completion of the work specified herein.

4. The Contractor's employees shall wear appropriate safety gear, uniforms, and footwear that comply with all legal requirements including, but not limited to Occupational Safety and Health Administration (OSHA) requirements.

5. The Contractor shall comply with all applicable Federal, State, and local air pollution control laws and regulations.

USE OF PREMISES

The Contractor is to repair or replace to the full satisfaction of PRPD, or reimburse for damages caused by the Contractor, as a result of performance of work specified herein.

A staging and equipment storage area will be provided and location will be specified by PRPD. Contractor shall place temporary fencing around the perimeter of the staging and storage area.

During the progress of the work specified herein, the Contractor shall keep the premises free from the accumulation of waste materials, rubbish, and other debris resulting from the work. At the completion of the work, the Contractor shall remove all waste materials, rubbish, and debris from and about the premises, as well as all tools, appliances, construction equipment, machinery, and surplus materials. The Contractor shall leave the site clean and ready for use by PRPD.

DAILY WORK HOURS

The Contractor shall restrict work hours on all project related work to between 7:00 a.m. and 7:00 p.m. daily, Monday through Friday excluding holidays. The restriction shall include all associated move on, set up, equipment and material delivery, and other project activities not strictly related to the daily progress of the project.

SAFETY AND PROTECTION

The Contractor shall by solely and completely responsible for initiating, maintain, and supervising all safety precautions and programs in connection with the work. The Contractor shall take all necessary protection to prevent injury to all employees on the work site and other persons including, but not limited to, the general public who may be affected thereby.

CONSTRUCTION PROCEDURES AND DETAILED ORDER OF WORK

The order of work shall be determined by the Contractor and approved by the Contract Officer. Order of work shall conform to the provisions in Section 5-1.05, “Order of Work”, of the Standard Specifications and these Technical Specifications.

The Contractor shall submit a construction schedule to the Contract Officer for review and approval prior to starting any contract work.

1. UNDERGROUND FACILITIES:

NOTICE IS HEREBY GIVEN THAT there may be underground water, gas, telephone, electric, irrigation, storm drain, septic lines, and other utility pipes buried in the project areas. The Contractor shall be responsible for relocating all conflicting underground facilities to the satisfaction of PRPD, including irrigation lines, water, storm drain, electrical, and other utilities.

Any repairs that are made shall be inspected by PRPD prior to burial. No additional payment will be made for relocating above noted facilities.

Prior to the start of construction the Contractor shall be responsible for contacting all utility companies and/or utility district, the County of Butte, and the Town of Paradise as to the location of all underground facilities. The Contractor shall be responsible for the location of all underground facilities or other buried objects which may be encountered, but which are not shown on the plans. (Call USA at least 48 hours prior to the start of construction at 1-800-642-2444.

Measurement and Payment: Any cost in locating underground facilities shall be considered as included in the cost of other items of the contract and no additional compensation will be allowed.

2. MATERIALS:

The Contractor shall furnish for use under these Technical Specifications all materials required to complete the attached contract. Only materials conforming to the specifications shall be incorporated in the work.

PRPD's Contract Officer shall have the right to obtain samples of all materials to be used in the work and to test such samples for specification compliance. PRPD reserves the right to obtain said samples at the point of delivery and/or at the point of manufacture. PRPD shall also have the right to inspect sources of materials to be used in the work to verify workmanlike procedures used by the materials supplier. If any portion of work doesn't pass testing, it shall be retested after the Contractor feels he has remedied the deficiency. The Contractor will pay for all re-testing.

No contract change orders will be authorized without prior approval from PRPD's Contract Officer.

3. AIR AND WATER POLLUTION CONTROL AND DUST CONTROL:

The Contractor's attention is directed to Standard Specifications, Section 7 – *"Legal Relations and Responsibilities"* and Section 10 – *"Dust Control"* for requirements related to air and water pollution control and dust control and sound control. The Contractor shall abide by the following regarding the control of **dust, water pollution, air pollution, and noise pollution:**

All exposed earth surfaces shall be watered periodically during construction activities. This practice shall be conducted twice during the morning and afternoon work hours. Further, the frequency of watering shall increase if wind speeds exceed 15 miles per hour.

Mud and dust carried onto street surfaces by construction equipment shall be removed on a daily basis.

Haul trucks shall be covered with tarpaulins or other effective covers at all times.

During clearing, grading, earth-moving, or excavation operations, fugitive dust emissions shall be controlled by regular watering, paving of construction roads, or other dust-preventive measures.

All material excavated or graded shall be sufficiently watered to prevent excess amounts of dust. Watering, with complete coverage, shall occur at least twice daily, preferably in the late morning and after work is done for the day.

All clearing, grading, earth-moving, or excavation activities shall cease when winds exceed 15 miles per hour averaged over 1 hour.

All material transported off-site shall be either sufficiently watered or securely covered to prevent excessive amount of dust.

The area disturbed by demolition, clearing, grading, earth-moving, or excavation operations shall be minimized at all times.

Apply nontoxic soil stabilizers according to manufacturer's specification to all inactive construction area (previously graded area inactive for ten days or more)

Provide temporary traffic control as appropriate during all phases of construction to improve traffic flow (e.g., flag person).

Contractor shall minimize exhaust emissions by maintaining equipment engines in good condition and in proper tune according to manufacturer's specifications and by not allowing construction equipment to be left idling for longer than 5 minutes.

Construction equipment exhaust emission shall not exceed Butte County Air Quality Management District Rule 202 "Visible emission" limitations.

Whenever feasible, Contractor shall utilize existing power sources (e.g. power poles) or clean fuel generators rather than temporary power generators.

All heavy construction equipment and all stationary noise sources (such as diesel generators) shall be in good working order and have manufacturer installed mufflers.

Equipment warm-up areas, water tanks, and equipment storage areas shall be located in an area as far away from existing residences as feasible.

Measurement and Payment: Compensation for providing air pollution control, dust control, noise control, and storm water pollution control shall be included in the prices paid for other items of work in the contract, and no additional payment shall be made.

4. HAZARDOUS WASTE IN EXCAVATION:

If the Contractor encounters material in excavation that he/she has reason to believe may be hazardous waste, as defined by §25117 of the Health and Safety code, he/she shall immediately so

notify PRPD's Contract Officer in writing. Excavation in the immediate area of the suspected hazardous material shall be suspended until PRPD's Contract Officer authorizes the work to be resumed. If such suspension delays the current controlling operation, the Contractor will be granted an extension of time as provided in Section 8-1.07, "Liquidated Damages", of the Standard Specifications.

If such suspension delays the current controlling operation more than 2 working days, the delay will be considered a right of way delay and the Contractor will be compensated for such delay as provided in Section 8-1.09, "Right of Way Delays," of the Standard Specifications.

PRPD reserves the right to use other forces for exploratory work to identify and determine the extent of such material and for removing hazardous material from such area.

5. UNANTICIPATED CULTURAL RESOURCES DISCOVERY:

Construction operations on this project may unearth or uncover cultural resources of a historic or prehistoric nature. If buried or obscured cultural materials are observed during vegetation removal and/or construction, the work in the area of discovery shall cease, PRPD shall be notified, the encountered resource shall then be identified, recorded, and an assessment made of the resource by a qualified archaeologist.

The right is reserved to PRPD and its authorized agents, including a qualified archaeologist and appropriate professionals to enter upon the right-of-way for the purpose of investigating and/or excavating and removing such resources. The Contractor shall cooperate with forces engaged in such work, and shall conduct his operations in such a manner to avoid any unnecessary delay or hindrance to the work being performed by such other forces.

The Contractor shall immediately notify PRPD of any delays to his operations as a direct result of the discovery of possible cultural resources that were not indicated on the plan or in the Technical Specifications. Any such delays will be considered right-of-way delays within the meaning of Section 8-1.09, "right of Way Delays," and compensation for such delay will be determined in accordance with said Section 8-1.09 The Contractor shall be entitled to no other compensation for such delay.

6. MAINTENANCE AND CONTROL OF TRAFFIC (IF NEEDED):

Description of Work: The proposed field lighting demolition and installation and any associated work shall be phased to allow for use of the park while construction is occurring. When a portion of the project is under construction the area to be disturbed shall be fenced off using temporary fencing to keep the public out of the construction area. Once that portion is completed the temporary fencing shall be removed.

The Contractor shall provide a Pedestrian Safety Plan five (5) working days prior to starting work. PRPD's Contract Officer retains the right to modify the plan as he may determine necessary.

The Contractor shall supply at his own expense all flagman, detour signs, barricades and all other traffic control devices and personnel in compliance with provisions of Section 7-1.09 – Public Safety and Section 12 – Construction Area Traffic Control Devices of the Standard Specifications, and as ordered by PRPD's Contract Officer, necessary to provide a satisfactory level of safety.

All street and lane closures, flagging arrangements, detours and traffic signs, including special signs, must be submitted in writing, for approval by the Town at least five (5) working days prior to each closure.

At the end of the day's work and when construction operations are suspended, all equipment and other obstructions hall be removed from the roadway.

During Contractor working hours a minimum of one (1) traffic lane in each direction, not less than twelve feet (12') wide, shall be open for public use. During non-working hours all traveled lands, on all roadways, shall remain open. Whenever vehicles or equipment are parked on the pavement or on the shoulder, within 6 feet of a travel lane, the parking areas shall be delineated with fluorescent traffic cones or portable delineators placed on a taper in advance of the parked vehicles or equipment or along the closed portion of the pavement or shoulder at 35-foot intervals of a point approximately twenty-five feet (25') past the last piece of equipment. A minimum of nine (9) cones or portable delineators shall be used for the taper. A C23 (Road Work Ahead) or C24 (Shoulder work Ahead), as appropriate, shall be mounted on a telescoping flag tree with flags.

Personal vehicles of the Contractor's employees shall not be parked on the traveled way or shoulders, including any section closed to the public.

The Contractor shall provide the Town with a Traffic Control Plan for each separate element of work five (5) working days prior to starting work. The Engineer retains the right to modify the plans as he may determine necessary.

The Contractor or his representative and all subcontractors shall have a copy of the approved Traffic Control Plan pertinent to the work in progress at all times. Failure to adhere to the Traffic Control Plans shall be grounds for the Town of Paradise to require the Contractor to stop the work until traffic control is in compliance with the approved Traffic Control Plan.

Whenever a traffic lane is to be closed to public traffic, the Contractor shall install a traffic control system in accordance with the current "MANUAL OF UNIFORM TRAFFIC CONTROL DEVICES – Warning Signs, Lights, and Devices for Use in Performance of Work Upon Highways."

During contractor non-working hours all traveled lanes shall remain open.

The Contractor shall keep current and notify the local Police and Fire Departments of his construction operation and traffic control changes three (3) days before work is to begin or traffic changes are made. The Contractor shall cooperate with local authorities relative to handling traffic

through the area and shall make his own arrangements in keeping the work area clear of parked vehicles.

When leaving a work area and entering a roadway carrying public traffic, the Contractor's equipment, whether empty or loaded, shall in all cases yield to public traffic.

Measurement and Payment: Full compensation for Maintenance and Control of Traffic (including sighs) shall be considered as included in other contract prices paid and no separate payment will be made.

7. CLEAN UP:

The Contractor shall clean up the jobsite prior to acceptance of the work. This includes, but is not limited to all dirt, spoils, debris, excess materials, and other items. All items shall be removed and the entire site shall present a clean, workmanlike appearance.

Measurement and Payment: Full compensation for clean-up shall be considered as included in other contract prices paid and no separate payment will be made.

8. CONSTRUCTION LAYOUT AND STAKING, (IF NEEDED):

The work shall consist of furnishing and setting construction stakes and marks to establish the lines and grades required for the completion of the work as shown on the plans and as specified in the Standard Specifications and these Technical Specifications.

The Contractor shall be responsible for re-establishing control monuments disturbed by his negligence at his expense.

The Contractor shall check and verify the accuracy of all control monuments and verify accuracy of all control lines and shall report any and all discrepancies to PRPD and Project Engineer prior to starting construction.

Staking shall follow the following general guidelines;

- Construction stakes shall be removed by the Contractor from the site of the work when no longer needed.
- The Contractor shall pay to re-establish control points, monuments, or stake out points. Re-establishment shall be performed by a registered Civil Engineer or a licensed Land Surveyor. All disturbed monuments shall be re-established after construction is complete.

Measurement and Payment: The cost for furnishing construction layout and staking shall be considered as being included in the contract unit price paid for other items of work and no separate payment will be made.

9. CLEARING, GRUBBING AND DEMOLITION:

Description of Work: Clearing, Grubbing and Demolition shall conform to the provisions in Section 16, "Clearing and Grubbing," of the Standard Specifications and these Special Provisions. The area to be cleared and grubbed shall remain within the limits of the proposed field lighting foundations. Specific items requiring removal include the following list and all items as shown on the plans.

- Remove and dispose of excess soil.
- Remove any additional items encountered by the Contractor that is associated with the completion of this project as determined necessary by PRPD's Contract Officer.
- Remove the stumps and roots of the existing trees that have already been cut down per the Tree Felling Permit.

Measurement and Payment: Clearing, Grubbing and Demolition shall be measured per lump sum. The per lump sum contract price paid for Clearing, Grubbing and Demolition shall include full compensation for furnishing all labor, materials, tools, equipment, and incidentals, and for doing all the work involved in Clearing, Grubbing and Demolition, as shown on the plans, as specified in the Standard Specifications, and these Technical Specifications, and as directed by PRPD's Contract Officer.

10. EXCAVATION, (IF NEEDED):

Description of Work: All earthwork shall conform to the provisions of Section 19, "Earthwork" of the Standard Specifications and these Special Provisions.

Site excavation shall consist of performing all operations necessary to excavate earth, rock, and all other materials upon which the foundations and other surface structures are to be placed; to backfill ditches and depressions caused by the removal of obstructions; to excavate trenches to place necessary conduit; to furnish all equipment necessary for these operations, and the performances of all incidental work of whatever nature that may be required to build the grade and maintain it in the form specified. Included in the work shall be all associated saw-cutting of pavement, grading areas to drain, and the scarification and recompacting to 95% relative compaction of the top 6 inches of the subgrade.

All earthwork as required for trenching purposes shall conform to the provisions of Section 19-3 "Structure Excavation and Backfill," of the Standard Specifications and these Special Provisions.

Measurement and Payment: The cost for excavation shall be considered as being included in the contract price and no separate payment will be made.

11. IMPORTED BORROW (IF NEEDED):

All imported borrow shall conform to the provisions of the Standard Specifications and these Special Provisions.

Imported borrow shall be of a quality suitable for the purpose intended, free of organic matter, or other unsatisfactory material.

Measurement and Payment: Quantities of Imported Borrow shall be measured by the cubic yard and area shown on the bid item list as compacted in place quality. Quantities of Imported Borrow will be paid for at the contract price per cubic yard, and shall include full compensation for furnishing all labor, materials, tools, equipment, and incidentals, loading, hauling, depositing, spreading, and compacting the material complete in place, preparing subgrade at the grading plane, and scarifying and compacting the top 6" of subgrade as shown in the Standard Specifications and these Special Provisions and as directed by the Engineer.

12. COOPERATION:

Should construction or other work of any other nature be under way by other forces or by other contractors within or adjacent to the limits of the work herein specified, the Contractor shall cooperate with all other such contractors or other forces to the end that any delay or hindrance to their work will be avoided.

13. REMOVE CONCRETE:

The removal of concrete shall conform to the provisions in Section 15, "Existing Highway Facilities," of the Standard Specifications and these Special Provisions.

Concrete removed shall be disposed of in accordance with the provisions in Section 7-1.13, "Disposal of Material Outside the Highway Right of Way," of the Standard Specifications.

Concrete shall be removed at expansion joints or by saw-cutting at locations approved by the Engineer.

All excavated areas which remain after existing concrete is removed and new improvements are installed shall be filled with compacted topsoil to the grade of the adjacent ground and/or improvements. Said topsoil shall be free of any refuse, heavy or silt clay, hard dirt, clods, stones larger than one and one-half (1-1/2) inches in size, roots larger than three-quarters (3/4) of an inch in diameter, noxious weeds or other deleterious materials.

Measurement and Payment: The cost for removing concrete shall be considered as being included in the contract unit price paid for other items of work, and no separate payment will be made.

14. TREE PRESERVATION:

Description of Work: Tree preservation shall consist of retaining and preserving all trees as shown on the Tree Preservation Plan prepared by the Owner. All qualifying trees within the construction limits of work that are to remain and any saplings proposed to be retained on the site as replacement trees shall be protected during construction activities.

Tree preservation shall consist of retaining and preserving all trees as shown on tree preservation plans. Construction and grading activities within the dripline of preserved trees will be avoided to the greatest extent feasible. Orange barrier fencing will be placed, at minimum, around the dripline of all preserved trees. Where construction will occur within the dripline of preserved trees, the barrier fencing will be placed at the edge of construction/grading to avoid impacting the trunk of the preserved tree or any additional roots.

No storage of equipment will be allowed within the dripline of preserved trees.

The depth of cut activities within the dripline of preserved trees should be minimized to the greatest extent feasible.

The Tree Protection Plan will be designed in accordance with *Town of Paradise Suggested Practices for Protection of Trees on commercial, Quasi-Public, and Multi-Family Construction Sites*.

The crown of preserved trees should not be thinned or trimmed for a minimum of one year following construction, with the exception of removing dead limbs.

Measurement and Payment: The cost for preserving trees shall be considered as being included in the contract unit price paid for other items of work, and no separate payment will be made.

15. MINOR CONCRETE CONSTRUCTION:

Description of Work: Concrete footings for field lighting shall conform to the provisions in Section 90-2, "Minor Concrete," of the Standard Specifications and these Special Provisions.

Subgrade preparation shall conform to the provisions of Section 73-1.02 of the Standard Specifications. The Contractor shall be responsible for performing grading, including furnishing fill material and excavating, as necessary to establish finish grade for placement of the footings. Subgrade shall be compacted to a relative density of 95 percent in conformance with California Test Method No. 216.

Concrete: Construction of the footings shall be of Class "A" Portland Cement concrete as specified in Section 90, "Portland Cement Concrete" of the Standard Specifications, and shall conform to the provisions of Section 90-2, "Minor Concrete," of the Standard Specifications.

Reinforcement: Reinforcement shall be placed as shown on the approved plans and shall conform to the provision in Section 52, "Reinforcement," of the Standard Specifications. All reinforcing steel shall be clean and free of deleterious materials at the time of concrete placement.

Measurement and Payment: The cost for minor concrete work shall be considered as being included in the contract unit price paid for other items of work, and no separate payment will be made.

ELECTRICAL WORK GENERAL REQUIREMENTS – SECTION 16010:

Description of Work: Electrical work shall conform to the provisions in the attached Section 16010, "Electrical Work General Requirements," of these Special Provisions.

Electrical work shall consist of performing all operations necessary including but not limited to providing all materials, labor, and the means and methods to complete the installation of the electrical system as defined by the plans and the following specifications including all items associated with the base bids and add alternates.

Measurement and Payment: Electrical work shall be measured on a lump sum basis. The lump sum contract price paid for Electrical Work shall include full compensation for furnishing all labor, materials, tools, equipment, and incidentals, and for doing all the work involved in the installation of all electrical work, as shown on the plans, as specified in the Standard Specifications and the attached Special Provisions, and as directed by the Contract Officer.

STADIUM FLOODLIGHTING – SECTION 16200:

Description of Work: Stadium Floodlighting (also referred to as field lighting) shall conform to the provisions in the attached Section 16200, "Stadium Floodlighting," of these Special Provisions.

Stadium Floodlighting shall consist of performing all operations necessary including but not limited to providing all materials, labor, engineering and the means and methods to finalize the permit process and complete the installation of the stadium floodlighting as defined by the plans and the following specifications including all items associated with the base bids and add alternates.

Measurement and Payment: Stadium Floodlighting shall be measured on a lump sum basis. The lump sum contract price paid for Stadium Floodlighting shall include full compensation for furnishing all labor, materials, tools, equipment, and incidentals, and for doing all the work involved in obtaining the building permit and the installation of the stadium floodlighting, as shown on the plans, as specified in the Standard Specifications and the attached Special Provisions, and as directed by the Contract Officer.

IV. TECHNICIAL SPECIFICATIONS

PART 1 - GENERAL

1.01 WORK INCLUDED

A. Conditions of the Contract and General Provisions apply to all work of this Section.

B. Contractor shall provide all materials, labor, and the means and methods to complete the installation defined by the plans and these specifications.

C. All conduit and pull boxes provided by the contractor for utility company wiring and cabling will be home runs from the point of entry to the District's property, to the Main Switchboard to Main Terminal Backboards, and/or to transformers, etc.

The pull boxes and conduits are for the wire and cable installed by the providing utility company exclusively.

1.02 REQUIREMENTS

A. Other Divisions: Requirements of other divisions shall apply to this division as if repeated herein, and should work under this division require any carpentry, backfill, masonry, etc., the appropriate division requirements shall apply. This includes work required for construction of proper stands, bases, and supports for electrical materials and equipment.

B. Rules and Regulations: All work and materials shall be in full accordance with the latest rules and regulations of the following:

1. California Electrical Code
2. California Building Code
3. Applicable regulations of local utility companies
4. California Code of Regulations, Title 8, Electrical Safety Orders
5. Equipment Utility Service Requirements Committee. Standards
6. General Order 95 of the Public Utilities Commission

Nothing in these drawings or specifications is to be construed to permit work not conforming to the above codes, rules, and regulations.

Whenever indicated, material, workmanship, arrangement, or construction is of higher quality or capacity than that required by the above rules and regulations, the drawings and/or specifications shall take precedence. Should there be any direct conflict between the rules and regulations and the drawings and/or specifications, the rules shall govern.

C. Permits, Fees, and Inspections: Contractor shall obtain all permits and arrange for Owner to pay required fees to any governmental agency or utility company having

jurisdiction over the work of this Section. Inspections required by any local ordinances or utility companies during construction shall be arranged by the Contractor.

All work and materials covered by these specifications and accompanying drawings shall at all times be subject to inspection by the Engineer or his representative. Any material not in accordance with the plans and specifications, or not installed in a neat and workmanlike manner, shall, upon order from the Engineer, be removed from the premises or corrective action taken within three (3) days; and if material in question has been installed, the entire expense for removing and reinstalling shall be borne by the Contractor.

On completion of the work, satisfactory evidence shall be furnished to the Engineer to show that all work has been installed in accordance with the Codes.

D. Specifications and Contract Drawings: Accuracy of data given herein and on the drawings is as exact as could be secured, but their extreme accuracy is not guaranteed. The drawings and specifications are for the assistance and guidance of the Contractor and exact locations, distances, levels, etc., will be governed by the construction and existing conditions and the Contractor shall accept same with this understanding.

Layouts of equipment, accessories and wiring systems are diagrammatic (not pictorial and not exact) but shall be followed as closely as possible. Report conflicting conditions to the Engineer for adjustment before proceeding with work. Should Contractor proceed with work without reporting conflict(s), he does so on his own responsibility, and shall alter work if directed by the Engineer, at his own expense. Right is reserved to make minor changes in locations of equipment and wiring systems shown, providing change is ordered before conduit runs and/or work directly connected to same is installed and no extra materials are required.

Drawings and specifications may be superseded by later detail specification and detail drawings prepared by the Engineer, and the Contractor shall conform to them and to such reasonable changes in the contract drawings as may be called for by these revised drawings without extra cost to the Owner. Contractor may request additional detail(s) and such shall be conformed to, without additional cost. Contractor may offer alternate detail(s), but such detail(s) shall be approved by Engineer and authority having jurisdiction.

E. Structural Requirements: Installation under this Section shall comply with the most current version of the California Building Code. Obtain the Town of Paradise's (TOP's) approval before performing any cutting or patching of concrete, masonry, or wood structure in the building.

F. Seismic Restraint Requirements: All electrical equipment and materials shall be braced against seismic forces in accordance with the most current version of the California Building Code, Chapter 16A. Provide lateral bracing as required. The field installation shall be subject to the review and approval of the Town of Paradise (TOP) Building Department.

G. Examination of Site: The Contractor shall be held to have visited the site prior to bidding and satisfied himself as to the conditions under which the work is to be

performed. He shall check existing conditions which may affect his work. Where new conduits are to be run underground at existing sites, contractor shall visit site prior to bidding and walk routes of new underground conduits, note areas of concrete and asphalt being crossed, and include in bid all costs for cutting and patching. No allowances shall subsequently be made in Contractor's behalf for any extra expense to which he or his "subs" may be put due to failure or neglect to discover conditions affecting the work.

H. Utility Company Coordination: Immediately after award of contract, contractor shall contact utility company representatives for power and telephone services. Contractor shall obtain specific requirements and details from respective representatives. Contractor shall discuss the aspects of the project related to services and coordinate scheduling of the work and inspections required by utility companies.

I. Underground Utilities: Existing underground utilities, services, circuits, piping, irrigation piping, etc., are present, but their exact locations are not known. Contractor shall locate and protect before trenching or excavating in any area. Consult utility companies, "as-built drawings" and Owner's maintenance personnel for location of existing underground work. If existing piping or utilities are damaged during construction, Contractor shall repair immediately at own expense. New underground work shall be modified as necessary to conform to existing conditions.

J. Shop Drawings, Substitutions, Materials, and Submittals:

1. Shop drawings and all supporting data shall be submitted as instruments of the Contractor who shall certify on his transmittal form that the submittals meet all requirements of the contract documents and conform to structural and space conditions. Contractor shall mark each page of each copy of submittal to clearly identify materials, products, or models being proposed. All extraneous information shall be marked out or page pulled if no item(s) on page are being proposed. Submittals which do not clearly identify items being proposed will be returned without review.
2. When specific names are used in connection with materials, they are used as standards only, but this implies no right upon the part of the Contractor to use other materials or methods unless approved as equal in quality and utility by the Engineer in writing.
3. Whenever an item of equipment or system is described herein or on the drawings in a descriptive, functional, or operational manner as opposed to catalog number or type, then the Contractor's submittal shall include all such descriptive, functional, or operational features to prove full equality to specified item or system.
4. Panelboard submittals shall be arranged to show bussing and circuit numbers with respective branch circuit protective device similar to schedules on Drawings. Switchboard and lighting control cabinet submittals shall show elevations indicating layout of devices, metering, etc. Device ratings, circuit numbers, and nameplates shall be in table form. Terminal cabinet submittals shall include elevations with terminal strip mounting arrangement. Lighting control submittals shall include starter wiring diagrams. Switchboard sections and layout shown on Drawings must be provided unless additional sections are required for proposed substitutions. Contractor may not provide fewer sections or alternate layouts than shown. (An empty load side section does not constitute one of the sections shown

on the plans unless an empty load side section is specifically called out. Where a full height incoming pull section is shown, the manufacturer shall provide a full height incoming pull section. Where utility company metering is shown in a section with main breaker below, that arrangement must be provided by the manufacturer. Where a full height distribution section is shown for distribution devices and no main breaker, then a full height distribution section, with no main breaker, must be provided.) Submittals which propose fewer sections or alternate layouts will be rejected without review.

5. Within 30 days after award of the contract, submit seven (7) bound copies of brochures containing complete information and catalog cuts on all equipment and materials, including that which is to be furnished as specified. The brochures shall be bound as complete volumes or bound according to classifications of equipment such as power, fixtures, and miscellaneous.
6. Approval of a substitution does not authorize any deviation from the utility, size, or function of the specified item unless specifically pointed out and approval requested in the letter of submittal. Responsibility for conflicts due to space limitations is not relieved by approval of a substitution. If revision of wiring, piping, or arrangement of other equipment is required by substitutions, prepare drawings showing such revisions, and after approval, furnish seven (7) copies for file and future reference.
7. Submittal Review:
   a. Items marked "No Exceptions Taken" or "Make Corrections Noted" shall not be resubmitted in subsequent submittals unless a complete package submittal is required by a reviewing agency or firm. Resubmittal items which have already been reviewed but no resubmittal was required, will not be reviewed a second time. Pages for such items will be returned unstamped and unmarked.
   b. When an item is marked "Revise and Resubmit" or "Rejected", the Contractor shall furnish a resubmittal for that item. Pages for resubmitted items shall be new submittal pages. The Contractor shall not resubmit previously stamped and annotated pages or photocopies of such pages. Resubmittals which include pages stamped as part of an earlier review or photocopies of such stamped pages will not be reviewed and will be returned as previously stamped and annotated.
   c. Refer to J.1 above. Non-compliance with paragraph J.1 requirements will cause submittal to be returned without review.
8. Should the Contractor's first submittal fail to meet approval, or should the Contractor fail to submit the specified items within the time schedule, then the right is reserved by the Engineer to select any or all items in question, which selection shall be final and binding upon the Contractor. The materials selected or approved by the Engineer shall be used in the work at no additional cost to the Owner.
9. Unless otherwise shown or specified, material shall be new, full weight, standard, the best quality of its kind, and satisfactory to the Engineer and Owner. Unless otherwise shown or specified, major equipment shall be the product of a manufacturer who has, for a period of not less than five (5) years, been in successful manufacture of the equipment, and who has a nationally distributed catalog covering ratings and specifications of said equipment.
10. Electrical materials shall bear the label of, or be listed by, the Underwriters Laboratories unless of a type for which label or listing service is not provided.
11. Materials and components shall conform to Industry Standard, including:

NEMA	National Electrical Manufacturer's Association
ANSI	American National Standards Institute
ASTM	American Society for Testing Material
ICEA	Insulated Cable Engineer's Association
CBM	Certified Ballast Manufacturers
USA	United States of America Standards

12. Samples of fixtures, materials, and equipment shall be submitted for approval if requested.

K. Identification of Equipment: Nameplates shall be installed on electrical equipment. Nameplates shall adequately describe the item and its function or use of the particular equipment involved. Equipment to be labeled shall include the following:

1. Individual enclosures for equipment such as time switches, push buttons, contactors, relays, etc.
2. Group mounted equipment such as panelboards, terminal and control cabinets, switchboards, etc.
3. Individual circuit breakers on switchboards. Include breaker trip ampacity on line below use description.

A nameplate shall be attached to the Main Switchboard stating the name of the building, year completed, name of the Electrical Engineer, and name of the manufacturer with his identification number and nothing else.

Nameplate material shall be laminated phenolic plastic, black front and back with white core. Engraving shall be through the outer layer. Embossed plastic pressure sensitive labels are not acceptable.

In lieu of plastic plates, typed pasteboard inserted behind clear plastic protector in a metal holder inside door may be used to identify circuit breakers in panelboards.

In lieu of plastic plates, device plates shall be engraved directly with lettering filled with black enamel.

Nameplates shall be securely fastened to the equipment with #4 Phillips round head cadmium plated steel self-tapping screws or brass bolts or riveted to equipment.

L. Cutting of Structural Members: Unless specifically detailed on the structural drawings, cutting of joists and similar structural members is limited to cuts and bored holes located and sized in accordance with the requirements of Title 24. Cutting of structural mullions is prohibited except as specifically shown.

M. Record Drawings: The Contractor's foreman shall keep in his possession a minimum of two (2) sets of blueline prints. One set shall be marked as the work is installed, showing the work that has been installed, with deviations. The other set shall be marked showing deviations for the work shown and the locations of major items of equipment and feeders, dimensioned from curbs, foundations, or other landmarks. Obtain inspector's progressive approval of these marked sheets. Upon completion of

the work, all work installed shall be drafted by the Contractor to reproducible drawings, which shall be the as-built drawings.

N. Cleaning and Cleanup: After all work has been accomplished such as sanding, painting, etc., lighting fixtures, panelboards, and switchboards shall be cleaned to remove all dust, dirt, grease, paint, or other marks. All electrical equipment shall be left in a clean condition inside and out, satisfactory to the Engineer and Owner. Keep buildings and premises free from accumulated waste materials, rubbish, and debris resulting from work herein, and, upon completion of said work, remove tools, appliances, surplus materials, waste materials, rubbish, debris, and accessory items used in or resulting from said work and legally dispose of off the site.

O. Protection: The Contractor shall protect from damage during construction the work and materials of other trades as well as the electrical work and material. Electrical equipment stored and installed on the job site shall be protected from dust, water, or any other damage.

P. Working Space: Adequate working space shall be provided around electrical equipment in strict compliance with the Codes. In general, provide 6'6" of headroom and 36" minimum clear work-space in front of switchboards, panelboards, and controls for 120/208 volts and 42" for 277/480 volts. Carefully coordinate locations and orientation of electrical equipment with other divisions to ensure that working space will be clear of piping, conduits, and equipment provided by others.

Q. Interruption of Service: Services (power, telephone, and other signal services) to existing building(s) and their related circuits which are to remain in operation shall not be interrupted except by specific approval of the Owner. If it is deemed necessary to shut down circuits for the installation of new work, such shut down shall be scheduled with the Owner who may, at his option, have a representative present. Any accidental interruption of service to circuits or equipment as a result of work performed by the Contractor shall, at the Contractor's expense, be restored in a manner acceptable to the Owner.

R. Cooperation and Coordination: Cooperate and coordinate with other crafts in putting the installation in place at a time when the space required by this installation is accessible. Work done without regard to other crafts shall be moved at the Contractor's expense.

S. Inspection: The Contractor shall cooperate with the Engineer and shall provide assistance at all times for the inspection of the electrical work performed under this contract. He shall remove covers, operate machinery, or perform any reasonable work which, in the opinion of the Engineer, will be necessary to determine the quality and adequacy of the work.

T. Manufacturer's Directions: Follow manufacturer's directions where these directions cover points not included on the drawings or in the specifications. When equipment is provided by other divisions, obtain directions from respective supplier.

U. Workmanship: Good workmanship shall be evidenced in the installation of all electrical materials and equipment. Equipment shall be level, plumb and true with the structure and other equipment. All materials shall be firmly secured in place and adequately supported and permanent. The recommendations of the National Electrical Contractors Association Standard of installation shall be followed except where otherwise specifically directed.

V. Operating Test: After the installation is complete, and at such time as the Engineer and other authorities having jurisdiction may request, the Contractor shall conduct an operating test for approval.

W. Manuals: In addition to the catalog data and Shop Drawings submitted for approval as required hereinbefore, the Contractor shall furnish to the Engineer three (3) final corrected sets of all data applicable to the equipment furnished.

1. All data shall be delivered not less than 30 days before the start of operation by the Owner or any demonstration period hereinafter specified and before finalizing construction work.
2. Each set of data per system shall be bound in one or more volumes. A top quality three-ring binder with vinyl or hard cover will be acceptable in lieu of binding; however, all insert data must be properly punched and reinforced. Each volume shall have permanent identification information on the spine.
3. Identification information shall include the building name, address, and location, system or systems included, and titled "Maintenance Manual".
4. All data shall be assembled in an orderly sequence with tabbed dividers to correspond with the table of contents.
5. Manufacturer's catalog data, Shop Drawings, etc., shall be marked clearly to identify the items applicable only to this project. Make and model numbers of each item installed shall be marked clearly in catalog data and identified with symbol used on the Drawings.
6. Each set of data shall contain the following:
    a. Table of Contents, listing orderly indexed names of items.
    b. Descriptive literature.
    c. Rating data, including rating tables, performance curves, etc.
    d. Dimension data.
    e. Spare Parts Lists.
    f. Manufacturer's operation and maintenance instructions and manuals.
    g. Shop Drawings.
    h. Copies of posted instructions and diagrams.
    i. Control diagrams and descriptions of sequence of operation.
    j. Copies of warranties, guarantees, certificates, etc.
7. Complete data, including component parts, shall be provided on each item listed below:
    a. Lighting Fixtures.
    b. Lighting Control Equipment.
    c. Panelboards.
    d. Switchboards.

Submit copy to Engineer for approval before delivery to Owner.

8. In addition to the requirements above, contractor shall provide final programming information to Owner on disk for all systems requiring programming.

X. Contractor's Supervision: The Electrical Contractor shall personally, or through an authorized and competent representative, constantly supervise the work from its beginning to its completion and acceptance. He shall, as far as possible, keep the same foreman and workers on the work from its commencement to its completion.

Y. Temporary Work: All temporary electrical equipment and materials installed for construction and safety operations shall remain the property of the Contractor and shall be removed when permanent connections have been completed. No wire, bus, or electrical equipment which is part of any of the permanent electrical systems may be used for temporary electrical service. Temporary connections shall be safe and in accordance with accepted practices. The Contractor shall be responsible for any damage or injury to equipment, materials, or personnel caused by improperly protected temporary installations. All costs for materials and installation for temporary electrical facilities and energy for their operation shall be at the expense of the Contractor. The hours of operation, level of illumination, and coverage for safety of personnel shall meet the minimum requirements of the Owner (Division of Industrial Safety).

Z. Scheduling of Work:

1. Due to its nature, this work will have to proceed with a definite sequence of operations to minimize outages and to continue facilities to certain areas. The building(s) will remain in operation during the work and the Contractor shall make every effort to maintain required services (power and signal).
2. Wherever the work makes it necessary to cut off a feeder or branch circuit and it stands to remain out of service for some time, or longer than building operations will permit, the Contractor shall make temporary connections so the required outlets, devices, or loads will continue to be operational. Some outlets, devices and wiring in the area will remain undisturbed. The Contractor shall reconnect these circuits, extending where necessary, so all circuits will operate satisfactorily upon completion of the work.
3. Where power or signal system outages are unavoidable, such outages shall be scheduled with the Owner and shall occur at such times deemed least disruptive by the Owner.
4. Special precautions shall be taken to ensure safety of Owner’s staff and park visitors during construction. No trenches shall be left open and no equipment left unsupervised outside of construction area. Provide adequate fencing around construction area and post danger signs and other warnings against hazards, promulgating safety regulations and notifying Owner and users of adjacent sites.

AA. Existing Work: Existing conduits in alteration, extension, and remodeling areas which are required to be extended, altered, or reconnected shall be accomplished as shown or as directed. Where existing conduits which are indicated to be revised or which will be essential to the functioning to the particular system are cut or exposed due to

construction changes, new connections shall be made in the most expeditious manner as directed or indicated. Where wiring is involved, new wires shall be "pulled-in" between the nearest available, accessible, reused outlets. In all cases where new wires are required, indicated, or specified to be installed in existing conduits, if same cannot be installed, new conduits shall be provided therefore as directed. Attention is called to the fact that all new conduit, wiring, and apparatus shown on drawings or specified shall be connected to the existing systems so as to function as complete units. All conduits and electrical apparatus, etc., in place and not shown or specified to be reused or which will not be essential to the functioning of the various systems when the work is complete, shall be removed and stored where directed. No old material shall be reinstalled or reused unless so indicated on drawings or so specified. Concealed conduits which are not indicated or specified to be reused and become exposed due to construction changes shall be removed to the nearest available, accessible, reused outlets.

Where existing panel feeders are required to be extended, altered, or reconnected, megger test existing wiring prior to alteration and after work is complete. Note any defects or deficiencies found and present to Owner in letter form. It will be assumed existing feeders in area of alteration are in good working order unless noted otherwise by Contractor.

BB. Copies of codes, safety orders, submittals, specifications, drawings, addenda, and as builts shall be on the job and in possession of person responsible for electrical work (foreman or general foreman).

CC. Guarantee: Acceptance of the contract for this work includes this guarantee: The Contractor guarantees that he has performed the work in accordance with the contract documents. Contractor also agrees to replace or repair, as new, any defective work, materials, or part which may appear within two (2) years of final payment if in the opinion of the Engineer or the Owner the defect is due to workmanship or material.

DD. Warranties, guarantees, certificates, etc. that are furnished and are available for equipment and materials furnished and installed under this section shall be properly filled out as of the date of final payment and shall be delivered to the Engineer.

PART 2 - PRODUCTS

2.01 RACEWAY

A. All wiring shall be run in raceway.

B. The size of each raceway shall be largest of the following:
1. Minimum size to be 1/2".
2. Underground conduits to be 3/4" minimum.
3. Telephone conduits to be 3/4" minimum.

4. The size required by code fill table for THW to accommodate the number, size, and type of wires shown or specified or recommended by the manufacturer of the equipment served and also ground conductor.
5. The size noted on the Drawings.

C. Conduit Fittings: Except where otherwise noted, conduit fittings shall be Appleton, Crouse-Hinds, or equal. Unilets, condulets, etc., shall be malleable iron and fitted with cover and gasket.

D. Conduit Supports: Kindorf, Unistrut, T&B, or equal. All multiple hanger and support parts shall be zinc coated by hot dipping or electroplating or otherwise protected against corrosion.

E. Conduit Straps: T&B, Gedney, or equal, one or two hole malleable iron or snap type steel with ribbed back, galvanized or cadmium plated.

F. Cable Supports: Cable supports and boxes shall be installed for all vertical feeders in accordance with the schedule in the California Electrical Code. Cable supports shall be of the split wedge type which clamp each individual conductor firmly and tightens due to weight of cable. For cables with a metallic sheath, a basket weave or equal type of support shall be provided.

G. Acceptable raceway systems and their limitations of use are as follows:
1. Rigid Steel Conduit (RSC):
    a. Standard weight, zinc coated on outside by hot dipping with either zinc coating or other U.L. approved corrosion resistant coating on inside.
    b. Fittings shall be threaded and finished similar to conduit. Threadless fitting shall not be used. All joints shall be coated with conductive antiseize compound, T&B "Kopr-Shield" or approved equal, except where conduit is run in permanently dry locations. Engineer knows of no equal to "Kopr-Shield".
    c. Where installed in contact with earth or fill material, conduit shall be wrapped with net four (4) layers of Scotchrap #50, Schuller VID-10, or equal, or encased in three inches of concrete. In lieu of hand wrapping, Contractor may provide PVC coated galvanized conduit and fittings. The thickness of the PVC coating shall be a minimum of .040" (40 mil) on all pipe and fittings (except where part shape demands less thickness). PVC coated elbows shall be Ocal, Inc. Engineer knows of no equal.
    d. Conduits connected to boxes and cabinets shall be fitted with two locknuts and insulated bushings, OZ B Series, Appleton BU Series, or equal, U.L. approved and bonded. Grounding bushings shall be used whenever grounding conductors are installed.
    e. Conduit stubs shall be capped with coupling, nipple, coupling and plug.
    f. Conduits connected to top and sides of boxes, cabinets, or any exterior enclosure exposed to weather or in areas subject to excessive moisture shall be fitted with watertight sealing hubs of steel or malleable iron with sealing ring and insulated throat, T&B 370 Series, EFCOR 40-50B Series, or equal.

2. Intermediate Metal Conduit (IMC): Requirements for IMC are same as specified for RSC.
3. Electric Metallic Tubing (EMT):
   a. Rolled steel, zinc coated outside with either zinc coating or other approved corrosion-resistant coating on the inside.
   b. Couplings shall be compression type - Appleton 95-T Series, T&B 5123 Series, or equal. (Contractor may use concrete tight steel set screw couplings, Appleton TWC-5 Series, T&B TK-120 Series, or equal. When using set screw fittings, a green insulated bonding conductor shall be provided in raceway.)
   c. Connectors shall be compression type with insulated throat - Appleton 86-T Series, T&B 5123 Series, or equal. (Contractor may use concrete tight steel set screw couplings, Appleton TW50-SI Series, T&B TC-720 Series, or equal. When using set screw fittings, a green insulated bonding conductor shall be provided in raceway.)
   d. May be used:
      1) Concealed above furred ceilings or in attic spaces.
      2) Exposed above eight foot (8') elevations, indoors.
      3) Exposed in electrical rooms.

4. Flexible Metal Conduit:
   a. Minimum trade size, one-half inch (1/2"), unless specified otherwise in other sections of these specifications. Flexible conduit shall be steel.
   b. Connectors - T&B "Tite Bite" insulated. Engineer knows of no equal.
   c. May be used only for crossing of seismic joints, connection of recessed fixtures, controls and mechanical equipment, and devices mounted to T-bar ceilings. Use Liquid Tight Flexible Metal Conduit, as specified hereinafter, where exposed to weather or other wet or corrosive conditions.
   d. Length shall be a practical minimum but to allow for movement of equipment connected without restricting flexibility of conduit.

5. Liquid Tight Flexible Metal Conduit:
   a. Minimum trade size, one-half inch (1/2").
   b. Connectors - Appleton STB Series, insulated. Appleton, Crouse-Hinds, or equal may be used.
   c. Length shall be a practical minimum but to allow for movement of equipment connected without restricting flexibility of conduit.

6. PVC Conduit, Schedule 40: U.L. listed and labeled for direct burial.
   a. Minimum trade size, 3/4".
   b. Use only underground. All conduit shall be encased with 3" concrete envelope or clean sand. Concrete shall be two sack mix with 3/4" maximum aggregate. Conduit separation for concrete encased conduits shall be provided using plastic conduit spacers specifically designed for the purpose. Place spacers maximum of 4'0" on center. Sand encased conduits shall be installed in layers to maintain vertical separation and horizontal separation shall be maintained using rebar stakes.

c. A copper bonding conductor shall be pulled in each power, control, signal, and other raceway, except public telephone and data communications, and bonded to equipment at each end with approved lugs.

d. Continuation of run above grade, slab, or into building interior shall be with RSC, IMC, or EMT as per conduit specification.

e. “Hot box” or field heated bends and elbows are not acceptable. Bends, elbows, and risers shall be made with rigid galvanized steel conduit using threaded adapters. At each end of conduit run, bond metallic portions of raceways to each other and to equipment connected at each end of conduit run. Protect metal portions from corrosion as specified for rigid steel conduit.

   In lieu of providing RSC bends in PVC duct banks, contractor may provide long radius PVC elbows with a minimum radius of 24" for 3/4" to 2" conduits and a minimum radius of ten times the conduit trade size for conduits larger than 2". (Note: As an example, a 2-1/2" conduit will require an elbow with a minimum radius of 30".) Pullrope used when PVC elbows are provided must be of a material and diameter that will not cause damage to inside surface of elbow when wire is pulled. Contractor will be required to replace any underground elbow determined to be damaged (grooved, cracked, etc.). Elbows under concrete floor slabs or rising up into footings must be RSC as specified hereinbefore.

f. Provide bell ends on all conduits rising into pullboxes, switchgear, lighting poles, rooms and any location where raceway ends.

g. All joints and fittings shall be glued using appropriate PVC cement.

2.02 BOXES AND ENCLOSURES

A. All boxes and enclosures shall be suitable for the environment in which they are installed. This includes enclosures for switchboards, panels, control cabinets, terminal cabinets, disconnect switches, signal devices, and the like.

B. Outlet Boxes:

1. Outlet boxes shall be of welded construction or one piece deep-drawn steel, galvanized gang type. Octagon concrete rings may be folded type. Sectional boxes shall not be used. Boxes installed in any exterior location, where exposed to rain or where exposed to moisture laden atmosphere shall be cast screw hub type with gasketed weatherproof covers. Where installed in finished areas, exposed boxes shall be cast screw joint type or other type that does not have unused knockouts.
2. Each box shall be large enough to accommodate the required number and sizes of conduits, wires, splices, and devices but not smaller than size shown or specified.
3. Switch and receptacle boxes shall be not less than 4" square by 1-1/2" deep for single devices, 4-11/16" by 1-1/2" deep for two devices.
4. Boxes for special devices shall be particularly suited for intended use.
5. Provide blank cover plates on all outlet boxes which are installed as part of an empty conduit system. Refer to finish material.

C. Junction Boxes and Pullboxes:

1. Boxes having an internal volume less than 100 cubic inches shall be as specified for outlet boxes. Boxes having internal volume greater than 100 cubic inches shall be of panelboard type construction except that covers shall be secured by screws or bolts.
2. Boxes exposed to rain or installed in wet locations shall be specifically designed for the purpose.
3. All boxes shall be installed so that covers are accessible after completion of the installation.
4. Boxes shall not be installed in finished areas unless specific approval for such installation is granted by Engineer.

D. Box Mounting: Boxes shall be independently and securely supported in place by wood blocking spanning stud space or manufactured adjustable channel type hanger, Steel City, Raco, or approved equal. Use wood screws to fasten to wood blocking or sheet metal screws to attach to metal channel. Side strap mounting shall not be used. Attach blocking or channel to studs using wood screws. Sheetrock screws or deck screws shall not be used. Surface boxes shall be supported with expansion screws, bolts, or anchors. Suspended boxes shall be supported with threaded rods or strut assemblies attached directly to structural members by means of bolts or anchors.

E. Precast Concrete Boxes:
1. Boxes: Precast high-density reinforced concrete, rated for H/20 vehicular traffic loading, unless shown otherwise on Drawings.
2. Extensions: At sectional type boxes, provide a minimum of two precast extensions. Provide additional extensions as required to provide space in box for code required cable bending.
3. Covers: Unless noted otherwise on drawings, covers shall be H/20 vehicular traffic rated, steel checker plate, galvanized, with hold-down bolts. Covers shall be factory marked as follows:

SYSTEM	MARKING
Power 600 volts or less	Electrical
Telephone	Telephone
Grounding	Ground

4. Size: Provide size shown on Drawings. If sizes are not shown, provide boxes sized per Codes. (Note: Minimum size may be indicated in Symbol List on Drawings.)

2.03 CONDUCTORS

A. Conductors for power, lighting, and control shall be in raceway and shall be as follows:
1. #10 AWG and smaller shall be solid copper, 98% conductivity except for signal and control cables which may be stranded. (Stranded conductors may be used for #10 and smaller if wiring devices [switches, receptacles, etc.] are equipped with terminals specifically designed to accommodate stranded wire.)
2. #8 AWG and larger shall be stranded copper, 98% conductivity.

3. Minimum size branch circuit shall be #12 AWG.
4. All insulation shall be 600 volt THHN/THWN except for low voltage control and signal cable.
5. Conductors shall be color coded. Refer to Part 3 of this section.
6. Conductor markers - T&B vinyl, Brady Permashield, or equal.
7. Control wiring smaller than #12 AWG shall be type TFF or THWN.

B. Terminators:
1. Use lugs or socket type terminals furnished with equipment.
2. For #10 and smaller, T&B Sta-Kon, Buchanan "Termend", or equal, self-insulated forked tongue lug.
3. #8 to #4/0 - Single Hex head screw or bolt clamp type with double hole tongue, T&B locktite, Burndy Qiklug type QA, or equal.
4. #250 MCM and larger - Double Hex head screw or bolt clamp type with double hole tongue, T&B locktite tandem, Burndy Qiklug type QQA, or equal.

C. Splices:
1. #10 and smaller, including fixture taps - pre-insulated coiled-spring type connectors, 3M Scotchloks, T&B Piggys, or equal.
2. #8 to #4, Split bolt service connectors, T&B locktite, Burndy Servit, or equal, insulated with Scotch #88, Okoweld four purpose tape, or equal.
3. #2 and larger, bolted pressure connectors, OZ ST, Burndy OKLIP, or equal, insulated with "Scotchfill" and Scotch #88 or Okoweld four purpose tape.
4. Splice sealing kits - Scotchlock sealing packs for wire size to #10 and Scotchcast kits for larger splices as recommended by 3M Co. Engineer knows of no equal to Scotch kits.

D. Lubricant for conductor installation shall be powdered soapstone, Y-er EAS, Minerallac "Pull-In" compound, or other U.L. approved lubricant.

E. Cable Identification: Non-ferrous identifying tags or pressure sensitive labels shall be securely fastened to all cables, feeders, and power circuits in pullboxes and manholes. Tags or labels shall be stamped or printed to correspond with markings on Drawings or marked so that feeder or cable may be readily identified.

2.04 LIGHTING FIXTURES

A. Furnish and install fixtures as indicated on Drawings, including lamps, hangers, frames, supports, etc., complete and ready for operation. Accessories such as straps, mounting plates, nipples, or brackets shall be provided for proper installation.

B. High Intensity Discharge fixtures shall be equipped with ballasts of the constant wattage, high power factor type. Ballasts shall be multi-tap type to allow connection to 120V, 240V, 277V, or 480V circuits.

C. Ballast voltage shall be verified with branch circuiting requirements.

D. Fixtures shall be lamped with Osram Sylvania, Phillips, or equal lamps. Lamps are specified in Fixture Schedule to establish type, color temperature and quality. Contractor shall provide equivalent lamps which are compatible with ballast provided. Lamp/ballast combination provided by contractor shall not void lamp or ballast manufacturer's warranties. Provide copies of warranties in submittal and in O&M manuals. All lamps of each type shall be of same manufacturer.

2.05 PANELBOARDS, SWITCHBOARDS, CONTROL CABINETS, ETC.

A. ALL (yes, ALL) circuit breakers shall be equipped with padlocking devices for locking handle in off position. Devices shall be factory installed or furnished by factory and installed by Contractor.

B. Multiple pole circuit breakers shall have internal common trip connection. Single pole breakers shall not be tied at handles to form multiple pole breaker.

C. All circuit breakers shall be bolt-on type.

D. Handle "Lock On" devices shall be furnished for 10% of circuit breakers provided. Furnish in factory packaging unless noted to be installed on Drawings. (Note: These devices have different function than those specified in paragraph A. above.)

E. Circuit breaker numbers shall be adhesive backed engraved or embossed micarta or stamped into deadfront. Snap-in plastic numbers are not acceptable.

F. Busses shall be copper with a current density of 1000 amps per square inch, maximum.

G. Exterior of surface mounted enclosures shall be factory finished to match fronts.

H. Enclosures shall be finished in ASA 61 or Standard Factory gray enamel.

I. Enclosures shall be fitted with copper ground bus, similar to neutral bus, not insulated from enclosure. Bus shall be complete with lugs.

J. Directory holder shall be metal with clear acetate directory cover. Holder shall be welded to inside of door or epoxied in place by contractor.

K. Nameplates shall be as hereinbefore specified.

L. Busses shall extend full length of usable space of distribution sections.

M. Fronts shall have concealed trim fasteners and a hinged door with concealed hinges and flush locking latch.

N. Main breakers, where specified as part of a combination main and distribution section or panel, shall be located above or below distribution bussing and be connected such that normal load side of breaker is disconnected when breaker is in open position. Backward connections are prohibited.

O. Where spaces are indicated on the Drawings, all required hardware and trim shall be provided to allow for future installation of breaker, switch, or combination starter of size shown.

P. Switchboard sections and arrangement shown on Drawings must be provided unless additional sections are required for proposed substitutions. Contractor may not provide fewer sections or different arrangement than shown. (An empty load side section does not constitute one of the sections shown on the plans unless an empty load side section is specifically called out. Where a full height incoming pull section is shown, the manufacturer shall provide a full height incoming pull section. Where utility company metering is shown in a section with main breaker below, that arrangement must be provided by the manufacturer. Where a full height distribution section is shown for distribution devices and no main breaker, then a full height distribution section, with no main breaker, must be provided.)

Q. Bussing ampacity requirements indicated on drawings shall be applied to all bussing in equipment. Bussing ampacity at distribution sections of switchboards shall not be reduced.

R. The available fault current shall be obtained from the serving utility. Overcurrent protective devices, busses, and other components shall be selected and coordinated to clear faults and protect the system and all elements. This requirement is a minimum requirement and supercedes equipment selections which do not meet this requirement and which may be shown or specified elsewhere. The frame designations shown in schedules on drawings establish minimum AIC requirements. Proposed substitutions must meet or exceed the AIC rating of the specified frame. Series rating of components is not acceptable.

S. Panelboards and Switchboard: Shall be Square D, Eaton Electrical, or equal, of type and arrangement as indicated on Drawings. Layout of equipment on Drawings is based on Square D unless indicated otherwise in details on drawings. Manufacturers who cannot meet the requirements specified or shown will not be acceptable.

T. Pedestals: Shall be Tesco or equal. Layout on Drawings is based on Tesco.

2.06 CONTACTORS AND RELAYS

A. Shall be Square D, Asco, or equal, as indicated on Drawings.

PART 3 - EXECUTION

3.01 WIRING AND RACEWAY SYSTEMS

A. Excavating and Trenching: Perform all excavations as required for the installation of the work included under this Section, including shoring of earth banks to prevent cave-ins and to protect workmen and equipment. Restore all surfaces, roadways, walks, curbs, walls, existing underground installation, etc., damaged or cut as a result of the excavations to their original condition in a manner approved by the Engineer. Stop machine excavation for trenches, in solid ground, several inches above required grade line, then trim trench bottom by hand to accurate grade so that a firm and uniform bearing throughout entire length of duct is provided. In lieu of above hand excavation in bottom of trench, Contractor may excavate to depth no less than 6 inches below required grade line and place a bed of sand or granular soil, properly compacted to provide a uniform grade and to provide a firm support for duct throughout its entire length. Minimum conduit depth of pipe crown shall be 2'-0" below finished or natural grade, unless detailed otherwise on Drawings. Conduits under parking lots, roadways, driveways, fire truck access routes, and other areas subject to vehicular traffic shall be installed a minimum of 24" below grade.

B. Backfilling: No backfilling operations shall begin until the required tests and inspection has been made. Should any of the work be enclosed or covered up before it has been approved, Contractor shall, at his expense, uncover the work. After it has been inspected, tested, and approved, he shall make all repairs necessary to restore the work of other contractors to the condition in which it was found at the time of uncovering. Except under existing paved area, walks, roads, or similar surfaces, and in cases where rock is encountered, backfill more than 12" above the top of the pipe shall be made using suitable excavated material placed in 6" layers measured before compaction, and tamped by machine. Surface work shall be replaced to match the existing. Entire backfill for bored excavations under existing pavement, walks, roads, or similar surfaces, shall be made with clean sand compacted by flooding.

The contractor shall install a marking tape six inches (6”) below grade and directly above all electrical conduits. The tape shall consist of a 4 mil. insert plastic film specifically formulated for prolonged use underground. It shall be highly resistant to alkalis, acids and other destructive agents found in the soil. Tape shall have a minimum tensile strength of 20 lbs. per three inches (3”) with strips and a minimum elongation of 500%. Tape shall bear a continuous painted message repeated every 16 to 36 inches (16” to 36”) warning of the installation buried below. The message shall read “CAUTION – ELECTRICAL POWER LINE BURIED BELOW” or “CAUTION – ELECTRICAL SIGNAL LINES BURIED BELOW” as applies. Installation instruction for the tape shall be printed with each message along the entire length. The tape shall be as that manufactured by Reef Industries, Inc., or approved equal. For those installations involving non-metallic pipe, tape shall be aluminum foil encased in two layers of inert plastic film enabling the tape to be inductively located. Terre Tape “D” Warning Tapes are acceptable. When conduit below is plastic, tape shall have metallic content and shall respond to metal detectors. Do not exclude this. It will be required to verify the installation of this tape.

C. Tests: Test all wiring and connections for continuity and grounds before any fixtures or equipment are connected, and where such tests indicate faulty insulation or other defects, they shall be located, repaired, and retested at the Contractor's expense.

D. Flashing and Sealing: Flash and counterflash roof and wall penetrations in manner acceptable to the Owner. Conduits, ducts, etc., passing through finished walls and ceilings shall be fitted with steel escutcheon plates, chrome or paint finish as directed. Conduits which penetrate floor slabs and concrete or masonry walls shall be grouted and sealed watertight at penetration. Conduits penetrating exterior walls other than concrete or masonry shall be sealed watertight with Vulkem 116 polyurethane sealant. All flashing and sealing shall be provided by this Contractor.

E. Grounding and Bonding: Grounding and bonding shall be installed as required by the applicable codes, rules, and regulations, and as follows:

1. The service and enclosure shall be grounded.
2. Each building shall have its own grounding electrode. Metal water and gas piping, and building structural steel, shall be bonded to grounding electrode at first panel ground bus unless detailed otherwise on the Drawings.
3. All raceway systems, supports, cabinets, panelboards, control equipment, lighting fixtures, and utilization apparatus shall be permanently and effectively grounded.
4. Where the raceway is used as the grounding conductor, good contact shall be made between conduit or tubing and panels, cabinets, outlet boxes and equipment, lighting fixtures, etc., to maintain continuity of ground. Where it is not possible to obtain good contact, additional bonding shall be provided. Supplemental bonding shall be provided between raceway and enclosure and at conduit knockouts and at reducing washers.
5. All non-metallic raceways, exclusive of public telephone, shall contain a code size copper conductor, green insulated, properly bonded to equipment at each end, and to metallic portions of the same raceway.
6. All grounding type receptacles shall have grounding contact connected to a grounding conductor. Grounding conductor may be code size green insulated copper conductor installed in circuit raceway or may be metallic raceway. If metallic raceway is used as grounding conductor, a green insulated copper conductor must connect receptacle grounding contact to lug or screw terminal in outlet box or to grounding bushing at raceway. Isolated grounding type receptacles shall have code sized green insulated copper conductor installed in circuit raceway.
7. Provide bonding jumper around flexible metallic conduit. Bonding jumper shall be inside flex.
8. Raceway size shall be increased if necessary to accommodate bonding or grounding conductors and shall be based on raceway fill tables.
9. Where cabinets are furnished with grounding bus, all required bonding conductors shall connect thereto, each with separate lug.
10. Buried ground connections shall be made by the Cadweld process using molds and charges according to manufacturer's recommendations.
11. Grounding electrodes and connections to building water and gas mains or building structural steel shall have insulated conductors run in conduit directly to service ground bus separate from any other grounding conductor.
12. Each grounding electrode installed shall be tested prior to connection to equipment. Ground resistance tests shall be performed by an independent testing agency using a Megger Earth Tester or equivalent and test results shall be forwarded to the Engineer for approval.

3.02 RACEWAY SYSTEMS

A. Unless otherwise specified, all raceway shall be installed concealed. Raceway may be run exposed on unfinished walls, in attics and roof spaces, and in electrical rooms when run to surface cabinets, panels, or gutters. Conduit shall not be installed in concrete slabs.

B. Individual horizontal raceways not larger than 1-1/2" size shall be supported by means of straps or individual hangers. Individual horizontal raceways larger than 1-1/2" size shall be supported by individual hangers. Above accessible ceilings, spring steel fasteners, clips, or clamps specifically designed for supporting exposed single conduits up to 1" size may be used in lieu of straps or hangers. Hanger rods used in connection with spring steel fasteners, clips, and clamps shall be either 1/4" diameter or larger galvanized steel rods.

C. Where two or more horizontal raceways run parallel and at the same elevation, they shall be supported on multiple hangers. Each raceway shall be secured to the horizontal hanger member with a U-bolt, strap, or other specially designed and approved bolted fastener. Hanger rods used in conjunction with multiple hangers shall be 3/8" diameter or larger, galvanized steel rods.

D. Vertical raceways not larger than 1-1/2" shall be supported by riser clamps at each floor or by straps not over 8' apart. Vertical raceways, conduits, and EMT larger than 1-1/2" shall be supported by riser clamps at each floor. Short vertical drops larger than 1-1/2" shall be supported by hangers close to the elbows at the tops and additionally secured to walls, columns, etc. by straps spaced not over 8' apart.

E. Multiple conduit hangers shall consist of two or more steel hanger rods, a steel horizontal member, and all U-bolts, clamps, and other attachments necessary for securing hanger rods and conduits. Hanger rods shall be threaded either full length or for a sufficient distance at each end to permit at least 1-1/2" of adjustment. Horizontal members shall be standard structural steel shapes such as angles or channels or 1-1/2" x 1-1/2", No. 12 gauge, cold formed, lipped channels designed to accept special spring-held hardened steel nuts for securing hanger rods and other attachments. Two or more channels may be welded together to form horizontal members of greater strength than single channels.

F. Straps and hanger rods shall be fastened to concrete by means of inserts or expansion bolts, to brickwork by means of expansion bolts, to hollow masonry by means of toggle bolts, to metal surfaces with machine screws, and to wood construction with wood screws. Expanders and shields shall be steel or malleable iron. Sizes of shields and bolts shall be such that the proof test load will not be less than four times the actual working load. Deck screws or sheetrock screws shall not be used. Wooden plugs and lead shields shall not be used for fastening. Perforated strap iron or nail straps shall not be used. Straps shall be screw fastened.

G. In any raceway run, the number of 1/4 bends, or the equivalent, between terminations at cabinets, outlet boxes, junction boxes, and pullboxes, shall not exceed the number of 1/4 bends indicated below, and the total length of run shall not exceed 150 feet. Straight runs of conduit shall not exceed 250 feet in length between terminations at cabinets, outlet boxes, junction boxes, and pullboxes.

Conduit Size - Inches	Number of ¼ Bends
½ to 1¼	4
1½ to 2½	3
3 to 4	2

H. The size of each run of raceway shall be largest of the following:
1. Minimum size to be 1/2".
2. Underground conduits to be 3/4" minimum.
3. The size required by code fill table for THW to accommodate the number, size, and type of wires shown or specified or recommended by the manufacturer of the equipment served and also ground conductor.
4. The size noted on the Drawings.

I. The Contractor's attention is directed to check the size of all raceways to determine that the green equipment ground conductor, specified, shown or required, can be installed in the same raceway with phase and neutral conductors in accordance with the percentage of fill requirements of codes. If necessary, the Contractor shall increase the raceway sizes shown or specified to accommodate all conductors without additional cost to the Owner.

J. Conduit caps shall be installed during construction.

K. Pullropes shall be provided in all empty conduits and shall be 3/16" diameter polypropylene. (Note: This pullrope is not for pulling cable but for pulling in pullrope for cable pulling.)

L. Plates and Grouting: Conduits, ducts, etc., passing through finished walls shall be fitted with steel escutcheon plates, chrome or paint finish as directed. Conduits which penetrate floor slabs and concrete or masonry walls shall be grouted and sealed watertight at penetration.

M. All joints of RSC and IMC raceways shall be coated with conductive antiseize compound, as specified hereinbefore, unless conduit is run in permanently dry locations. Remove couplings of factory joined conduit and coupling assemblies and coat joints.

N. Flexible conduit shall be used to cross seismic joints.

O. Plastic Conduit Expansion and Contraction: Contractor shall take precautions to allow for expansion and contraction of plastic conduit due to temperature changes. Exercise

care in storing materials to avoid warping and deterioration. Protect from direct exposure to sunlight.

P. Underground Conduits:

1. Conduit runs shown on site plan are shown for general routing. Conduit installation shall comply with applicable codes and specifications. Exact location of runs shall be coordinated to comply with codes and existing conditions.
2. Prior to any excavation, layout conduit routing. Routing shown on drawings is diagrammatic (not pictorial). Coordinate closely with existing underground work. Adjust routing and excavation to avoid conflict.
3. At existing sites, underground utilities, services, circuits, piping, irrigation systems, etc. are present, but their exact locations are not known. Contractor shall locate and protect before trenching or excavating in any area. Consult utility companies, “as-built drawings”, and Owner’s maintenance personnel for location of existing underground work. If existing piping or utilities are damaged during construction, contractor shall repair immediately at own expense. New underground shall be modified as necessary to conform to existing conditions.

3.03 BOXES

A. Boxes shall be accurately placed as shown on Drawings or as close thereto as possible.

B. Precast Concrete Boxes:

1. Sectional Boxes without Precast Floor: Unless detailed otherwise on drawings, provide poured concrete footing formed inside with 6" gravel in bottom of box to facilitate drainage. Conduits shall rise in bottom of box. Provide box extensions to allow ample clearance in box between conduit and box cover for cable bending radius.
2. Where boxes are installed at concrete or paved areas, box lid shall be flush with finish grade.
3. Size: Provide size shown on Drawings. If sizes are not shown, provide boxes sized per Codes. (Note: Minimum size may be indicated in Symbol List on Drawings.)

3.04 CONDUCTORS

A. Phasing: Terminals in panelboards, switchboards, and other equipment shall be phased A, B, C, reading left to right or top to bottom looking into the front of the equipment.

B. Conductors shall be coded as follows:

Voltage	Phase A	Phase B	Phase C	Neutral	Ground
120/208V	Black	Red	Blue	White	Green

Direct current - positive is red, negative is black.

Control conductors, other than branch circuits, shall be black.

Conductors in sizes up through #6 AWG shall have solid color finish as listed above. #4 AWG and larger shall be coded by application of phase tape for minimum of 6" length on conductor. Coding shall occur at all splices, terminations, and pullboxes.

Color coding shall be continuous and consistent throughout the work.

C. Circuit Identification: Each branch circuit, control, and signal conductor shall be labeled with the circuit number or terminal it is connected to. Use T&B vinyl, Brady Permashield mylar markers, or equal. Conductors shall be labeled at each panelboard, switchboard, control center, pullbox, and at each point of utilization such as fixtures, etc. Labeling shall correspond to control diagrams where applicable.

D. Connections to terminals shall be as follows: Refer to 2.03B. of this Section.

E. Splices:

1. Refer to 2.03C. of this Section.
2. Splices in underground pullboxes or in other areas subject to moisture shall be provided with cast resin kits. Use Scotchlock sealing packs for wire size to #10 and Scotchcast kits for larger splices as recommended by 3M Co. All splices to be prepared as hereinbefore specified before resin kits are applied. Engineer knows of no equal to Scotch kits. (Note: No signal splices are allowed in underground pullboxes or areas subject to moisture. Refer to respective signal section of Specifications.)
3. Wire splicing devices shall be sized according to manufacturer's recommendation.

F. Conductors in panels, etc., shall be laced with T&B Ty-raps, Dennison "Bar-loks", or equal.

3.05 EQUIPMENT AND MATERIALS

A. General Requirements for Panelboards, Switchboards, Control Cabinets, Etc.:

1. Wall mounted enclosures shall be mounted with top of enclosure 6'6" above finished floor except as otherwise noted.
2. Directories shall be typewritten and conform to circuit assignment at time of occupancy.
3. Conduits shall enter cabinet through neat hole and perpendicular to entrance face.
4. Conduits shall be fitted with insulated grounding bushing and bonded to ground bus.
5. At adjustable trip breakers, all adjustments shall be set at maximum settings unless instructed otherwise on drawings or elsewhere in these specifications. Where breakers are programmable, contractor shall furnish any equipment required to perform programming per manufacturer’s instructions. If manufacturer requires factory authorized service technician to make adjustments or perform programming, include all costs for such in bid.
6. Contractor shall provide a dedicated 1” conduit with telephone cable from main switchboard meter compartment to Telephone Service location.

B. Lighting Fixtures: Install fixtures as indicated on Drawings, including lamps, hangers, frames, supports, etc., complete and ready for operation. Fixtures, lamps, trim, and diffusers shall be clean at final acceptance.

END OF SECTION

PART 1 - GENERAL

1.01 WORK INCLUDED

A. Conditions of the Contract, General Provisions, and Section 16010 apply to all work of this Section.

B. Furnish and install Stadium Floodlighting System, complete with pole foundations and bases, poles, crossarms, fixtures, lamps and all parts and pieces and labor as shown and specified. It is the intent that a complete operating system be installed and that any brackets, supports, cords, excavation, backfill, concrete, engineering, or other items required to achieve this end result shall be furnished whether or not such item or items are specified herein or shown on the drawings. Control systems will be Owner provided.

1.02 GENERAL REQUIREMENTS

A. Equipment Tests and Standards:

1. All components of the system shall bear Underwriter's label and the complete system, as a whole, shall be approved by the Underwriter's Laboratories.
2. The Contractor shall:
   a. Provide complete designs, drawings, calculations, specifications, and Title 24 calculations for stadium floodlighting assemblies, including foundations, poles, and arms, stamped and signed by a California licensed Professional Engineer specializing in structural engineering.
   b. Submitted items will be checked for general design concept conformance only and will be submitted to the Town of Paradise (TOP) for review. If necessary, submittals will be returned to the Contractor for corrections and/or additional information, as required by the TOP. The Contractor shall make necessary changes and resubmit.
   c. As the review procedure is beyond the control of the Engineer, it must be recognized by the Contractor that the review process may take longer than other submittals. The Contractor has the option to obtain approval from the TOP as required and submit approved documents to the Engineer for review and comment. Approval by the TOP does not waive the Engineer's review requirement nor any other requirement of the documents.
   d. The Engineer will review the submittal one time only and will not perform calculations or prepare drawings required for the TOP. If the Contractor fails to provide proper information for approval or the Engineer is required to perform additional duties, such services will be reimbursed by the Owner and back-charged to the Contractor.
   e. Provide complete photometric reports produced by an independent testing laboratory for each type of reflector utilized to achieve performance criteria. ITL reports must be submitted with bid. Failure to do so will be cause for immediate rejection of bid.

DRAFT

f. Manufacturer shall submit a letter guaranteeing that footcandle levels and uniformities as specified will be met. In addition, manufacturer's remedy to deficiencies will be noted. NOTE: Penalty clause for the non-conformance under energy usage of the specifications.
g. Manufacturer shall submit in writing a minimum of five similar lighting projects in the state of California where the specifications outlined have been met. Include the project name, contact person and telephone numbers.
h. Provide complete UL Test Report- Bidder shall supply for the owner's review and retention a copy of the Underwriters Laboratory report covering the luminaire assembly being bid.
i. Provide written warranty from the manufacturer covering entire structure as outlined in specifications.
j. Provide written statements of model number and manufacturer for all equipment bid.
k. Provide lighting layout design showing luminaire mounting heights, aiming focus points, reflector types, number of luminaries per pole and kilowatt consumption.
l. Provide a drawing of the Sports Lighting Structure meeting or exceeding specified criteria.
m. Provide computer generated point-by-point analysis of field light values as set forth in accordance with lighting performance specifications.

B. Instructions and Manuals:
1. Equipment supplier's factory engineer shall provide technical assistance to Contractor during construction; supervise energization and operational testing of system and each component; supervise aiming of light fixtures; demonstrate system operation to the satisfaction of Owner; and furnish wiring schematics for all items of equipment, installation instructions, and printed detail of all routine maintenance and servicing as part of manuals.
2. Manuals shall be provided in substantial fiberboard covers, with title page, list of contents, and conspicuous label on cover and be delivered to and approved by Architect prior to testing and demonstration. Also, refer to requirements for manuals in Section 16010, Electrical.

C. Submittals: Furnish catalog data, shop drawings, wiring diagrams, and support details. Also, refer to requirements for shop drawings, substitutions, materials, and submittals in Section 16010, Electrical Work General Requirements. Submittal information required:
1. Light scans.
2. Spill scans.
3. Detailed warranty information.
4. Detail foundation design.
5. Energy cost analysis detailing energy and maintenance cost over a 25 year life cycle. Note that consumption shall not exceed the total kwh detailed in Article 1.06.

D. Warranty and Guarantee:

1. Two (2) Year Warranty: Each manufacturer shall supply a signed warranty covering the entire system for two (2) years OR for the maximum hours of coverage based on the estimated annual usage, whichever occurs first. Warranty shall guarantee light levels; lamp replacements; system energy consumption; maintenance and control services, spill light control, and structural integrity. Manufacturer shall maintain specifically-funded financial reserves to assure fulfillment of the warranty for the full term. Warranty may exclude fuses, storm damage, vandalism, abuse, and unauthorized repairs or alterations.
2. Manufacturer shall agree in writing to provide labor and materials for a period of two (2) years to replace defective parts or repair defects in workmanship, or, at its election, to pay reasonable costs of labor for such repairs. For the remainder of the warranty period, replacement materials will be provided at no charge.
3. Lamps shall be warranted by the manufacturer in writing not to fail for two (2) years from the date of delivery. Lamps which fail during the first year of the warranty period will be replaced and installed at no cost to the Owner. Lamps which fail during the second 12 months will be replaced by the manufacturer but installation will be the Owner's responsibility.
4. Manufacturer shall warrant in writing accurate alignment of the luminaires on the luminaire assembly for a period of seven (7) years starting from the date of delivery.
5. The contractor/manufacturer shall furnish 5% extra lamps and six (6) extra fuses to the Owner.

OR ADDITIVE ALTERNATE #1:

1. 25 Year Warranty: Each manufacturer shall supply a signed warranty covering the entire system for 25 years OR for the maximum hours of coverage based on the estimated annual usage, whichever occurs first. Warranty shall guarantee light levels; lamp replacements; system energy consumption; maintenance and control services, spill light control, and structural integrity. Manufacturer shall maintain specifically-funded financial reserves to assure fulfillment of the warranty for the full term. Warranty may exclude fuses, storm damage, vandalism, abuse, and unauthorized repairs or alterations.

E. Delivery:

1. The manufacturers must guarantee that the complete pole(s) and fixtures will be delivered to the job site within six (6) calendar weeks (42 days) of the manufacturer's receipt of TOP stamped plan approval.
2. The manufacturers must agree to a penalty assessment of $1,000 per day for every calendar day beyond forty-two (42) days from TOP approval that the complete product order has not arrived at the job site.

1.03 SUMMARY

DRAFT

A. Work covered by this section of the specifications shall conform to the contract documents, engineering plans as well as state and local codes.

B. The purpose of these specifications is to define the performance and design standards for Moore Road Ballpark Lighting. The manufacturer / contractor shall supply lighting equipment to meet or exceed the standards set forth by the criteria set forth in these specifications.

C. The sports lighting will be for the following fields:
1. Field #2 – 319'/300'/272' outfield (Dimensions are approximate, field verify.)

D. The primary goals of this sports lighting project are:
1. Guaranteed Light Levels: Selection of appropriate light levels impact the safety of the players and the enjoyment of spectators. Therefore the lighting system shall be designed such that the light levels are guaranteed for a period of years specified in 1.02 D.
2. Environmental Light Control: It is the primary goal of this project to minimize spill light and glare.
3. Life Cycle Cost: In order to reduce the operating budget, the preferred lighting system shall be energy efficient and cost effective to operate. All maintenance costs shall be eliminated, and the field(s) should be proactively monitored to detect fixture outages over a year life cycle specified in 1.02 D.

E. All lighting designs shall comply with all applicable codes and standards.

1.04 LIGHTING PERFORMANCE

A. Performance Requirements: Playing surface shall be lit to an average constant light level and uniformity as specified in the chart below. Light levels shall be held constant for a period of years specified in 1.02 D. Lighting calculations shall be developed and field measurements taken on the grid spacing with the minimum number of grid points specified below. Measured average illumination level shall be +/- 10% of predicted mean in accordance with IESNA RP-6-01, and measured at the first 100 hours of operation.

Area of Lighting	Average Constant Light Levels	Maximum to Minimum Uniformity Ratio	Grid Points	Grid Spacing
Field #2 Infield	50 footcandles	2.0:1.0	25	30'x30'
Field #2 Outfield	30 footcandles	2.5:1.0	71	30'x30'

B. Mounting Heights: To ensure proper aiming angles for reduced glare and to provide better playability, the pole mounting heights from the playing field surface shall be 70 feet for poles A1, A2, B1, B2, C1, C2, B3, B4 and 60 feet for poles A3, A4, C3, C4 as shown on the plans.

DRAFT

1.05 ENVIRONMENTAL LIGHT CONTROL

A. Spill Light Control: Maximum vertical footcandles taken with the meter aimed at the brightest light bank at a distance of 150 feet from the field perimeter shall not exceed 1.79. Maximum horizontal footcandles at a distance of 150 feet from the perimeter of the field shall not exceed 0.49. Footcandle readings shall be taken at 30' intervals along the specified line. Measured average illumination level shall allow a 10% variance of predicted mean in accordance with IESNA RP-6-01, and be measured at the first 100 hours of operation. Light measurements shall be taken at 36" above grade.

1.06 LIFE CYCLE COSTS

A. Energy Consumption: The average kWh consumption for the field lighting system shall be:

1. Field #2: 54 KWh or less.

B. Complete Lamp Replacement: Manufacturer shall include all group lamp replacements required to provide a period of years of operation specified in 1.02 D., based upon 650 usage hours per year.

C. Preventative and Spot Maintenance: Manufacturer shall provide all preventative and spot maintenance, including parts and labor for a period of years specified in 1.02 D. from the date of equipment shipment. Individual lamp outages shall be repaired when the usage of any field is materially impacted. Owner agrees to check fuses in the event of a luminaire outage.

D. Life Cycle Cost: Manufacturer shall submit life cycle cost calculations as follows. Equipment life cycle cost shall be included with the submittal package.

a.	**Luminaire energy consumption** # luminaires x ___ kW demand per luminaire x ___ kWh rate x ____ annual usage hours x years		
b.	**Demand charges**	+	
c.	**Cost for spot relamping and maintenance over a period of years specified in 1.02 D.** Assume ___ repairs at $ ____ each if not included with the bid	+	
d.	**Cost to relamp all luminaires for a period of years specified in 1.02 D.** ____ annual usage hours x years / lamp replacement hours x $125 lamp & labor x ____ fixtures if not included with the bid	+	
	TOTAL Year Life Cycle Operating Cost	=	

1.07 DELIVERY TIMING

A. Equipment On-Site: The equipment must be on-site as required by contractor, from receipt of approved submittals and receipt of complete order information.

1.08 BID SUBMITTAL REQUIREMENTS

A. Site plan review by the TOP and associated Conditions of Approval for the proposed project are based upon the use of Musco's Light-Structure Green System™. The Contractor may select an approved equal floodlighting system such as those supplied by CMH, Qualite, or Hubbell. A complete submittal package for approval, as outlined in Submittal Information at the end of this section, must be provided for all lighting systems as part of the bid submittal package. Special manufacturing to meet the standards of this specification may be required.

B. Design Approval: The owner / engineer will review shop drawings from the manufacturers to ensure compliance to the specification. If the design does not meet the design requirements of the specifications, the bid will be thrown out.

1.09 ALTERNATE SYSTEM REQUIREMENTS

A. Compliance to Specifications: Acceptance of a bid alternate does not negate the contractor and lighting manufacturer's responsibility to comply fully with the requirements of these specifications. Any exceptions to the specifications must be clearly stated in the prior approval submittal documents.

B. Light Level Requirements: Manufacturer shall provide computer models guaranteeing light levels on the field over a period of years specified in 1.02 D. If a constant light level cannot be provided, a maximum Recoverable Light Loss Factor of 0.70 shall be applied to the initial light level design to achieve the following Initial and target/maintained light levels. For alternate systems, scans for both initial and maintained light levels shall be submitted.

Area of Lighting	Average Initial Light Levels	Average Target/Maintained Light Levels	Maximum to Minimum Uniformity Ratio	Grid Points	Grid Spacing
	___ footcandles	___ footcandles	___:1.0		___' x ___'
	___ footcandles	___ footcandles	___:1.0		___' x ___'

C. Revised Electrical Distribution: Manufacturer shall provide revised electrical distribution plans to include changes to service entrance, panel, and wire sizing.

PART 2 – PRODUCTS

2.01 LIGHTING SYSTEM CONSTRUCTION

A. System Description: Lighting system shall consist of the following:

1. Galvanized steel poles and crossarm assembly (BASE BID – METAL POLES).
2. Pre-stressed concrete base embedded in concrete backfill allowed to cure for 12-24 hours before pole stress is applied. Alternate may be an anchor bolt foundation designed such that the steel pole and any exposed steel portion of the foundation is located a minimum of 18 inches above final grade. The concrete for anchor bolt foundations shall be allowed to cure for a minimum of 28 days before the pole stress is applied.
3. All luminaires shall be constructed with a die-cast aluminum housing or external hail shroud to protect the luminaire reflector system.
4. Manufacturer will remote all ballasts and supporting electrical equipment in aluminum enclosures mounted approximately 10’ above grade. The enclosures shall include ballast, capacitor and touch-safe fusing to indicate when a fuse is to be replaced for each luminaire. Safety disconnect per circuit for each pole structure will be located in the enclosure.
5. Wire harness complete with an abrasion protection sleeve, strain relief and plug-in connections for fast, trouble-free installation.
6. Pole mounting bracket with wire access hole and handhole, internal strain relief hook and ground lug for future loudspeakers. Provide wire access hole cover.

B. Manufacturing Requirements: All components shall be designed and manufactured as a system. All luminaires, wire harnesses, ballast and other enclosures shall be factory assembled, aimed, wired and tested.

C. Durability: All exposed components shall be constructed of corrosion resistant material and/or coated to help prevent corrosion. All exposed carbon steel shall be hot dip galvanized per ASTM A123. All exposed aluminum shall be powder coated with high performance polyester or anodized. All exterior reflective inserts shall be anodized, coated, and protected from direct environmental exposure to prevent reflective degradation or corrosion. All exposed hardware and fasteners shall be stainless steel of 18-8 grade or better, passivated and coated for protection against corrosion and stress corrosion cracking. All wiring shall be enclosed within the crossarms, pole, or electrical components enclosure.

D. Lightning Protection: All structures shall be equipped with lightning protection meeting NFPA 780 standards. Contractor shall supply and install a grounding electrode of not less than 5/8 inch diameter and 8 feet long, with a minimum of

10 feet embedment. Grounding electrode shall be connected to the structure by a grounding electrode conductor with a minimum size of 2 AWG for poles with 75 feet mounting height or less, and 2/0 AWG for poles with more than 75 feet mounting height.

E. Safety: All system components shall be UL Listed for the appropriate application.

F. Electric Power Requirements for the Sports Lighting Equipment:
1. Electric power: 208 Volt, Three Phase.
2. Maximum total voltage drop: Voltage drop to the disconnect switch located on the poles shall not exceed three (3) percent of the rated voltage.

2.02 STRUCTURAL PARAMETERS

A. Support Structure Wind Load Strength: Poles and other support structures, brackets, arms, bases, anchorages and foundations shall be determined based on the 2010 CBC Building Code and ASCE 7-05, wind speed of 85 MPH (based on 3 second gust), exposure category B and an importance factor. Luminaire, visor, and crossarm shall withstand 150 mph winds and maintain luminaire aiming alignment.

B. Structural Design: The stress analysis and safety factor of the poles shall conform to AASHTO 2009 (LTS-5) Standard Specifications for Structural Supports for Highway Signs, Luminaires and Traffic Signals.

C. Soil Conditions: The foundation design shall be based on soils that meet or exceed those of a Class 5 material as defined by 2010 CBC.
It shall be the contractor's responsibility to notify the owner if soil conditions exist other than those on which the foundation design is based, or if the soil cannot be readily excavated. Contractor may issue a change order request / estimate for the owner's approval / payment for additional costs associated with:
1. Providing engineered foundation embedment design by a registered engineer in the State of California.
2. Additional materials required to achieve alternate foundation.
3. Excavation and removal of materials other than normal soils, such as rock, caliche, etc.

D. Foundation Drawings: Project specific foundation drawings stamped by a registered engineer in the state where the project is located are required. The drawings must also be approved and stamped by the TOP Building Department. The foundation drawings must list the moment, shear (horizontal) force, and axial (vertical) force at ground level for each pole. These drawings are to be supplied by contractor.

PART 3 – EXECUTION

3.01 FIELD QUALITY CONTROL

A. Illumination Measurements: Upon substantial completion of the project and in the presence of the Contractor, Project Engineer, Owner's Representative, and Manufacturer's Representative, illumination measurements shall be taken and verified. The illumination measurements shall be conducted in accordance with IESNA RP-6-01, Appendix B.

B. Correcting Non-Conformance: If, in the opinion of the Owner or his appointed Representative, the actual performance levels including footcandles, uniformity ratios, and maximum kilowatt consumptions are not in conformance with the requirements of the performance specifications and submitted information, the Manufacturer or Contractor shall be liable to any or all of the following:

1. Manufacturer or Contractor shall at his expense provide and install any necessary additional fixtures to meet the minimum lighting standards. The Manufacturer or Contractor shall also either replace the existing poles to meet the new wind load (EPA) requirements or verify by certification by a licensed structural engineer that the existing poles will withstand the additional wind load.
2. Manufacturer or Contractor shall minimize the Owner's additional long term fixture maintenance and energy consumption costs created by the additional fixtures by reimbursing the Owner the amount of $1,000.00 (one thousand dollars) for each additional fixture required.
3. Manufacturer or Contractor shall remove the entire unacceptable lighting system and install a new lighting system to meet the specifications.

SUBMITTAL CHECKLIST

Design Submittal Data Checklist and Certification
All items listed below are mandatory, shall comply with the specification, and be Submitted With the Bid Package
(A SEPARATE SUBMITTAL CHECKLIST MUST BE SUBMITTED WITH EACH BASE BID OPTION)

Tab	Item	Description
A	Checklist	Listing of all information being submitted must be included on the table of contents. List the name of the manufacturer's local representative and his/her phone number. Signed submittal checklist to be included.
B	Equipment Layout	Drawing(s) showing field layout with pole locations.
C	On Field Lighting Design	Lighting design drawing(s) showing: a. Field Name, date, file number, prepared by, and other pertinent data

		b. Outline of field being lighted, as well as pole locations referenced to the center of the field (x & y), or Homeplate for softball field. Illuminance levels at grid spacing specified. c. Pole height, number of fixtures per pole, as well as luminaire information including wattage, lumens and optics. d. Height of light level test meter above field surface. e. Summary table showing the number and spacing of grid points; average, minimum and maximum illuminance levels in foot candles (fc); uniformity including maximum to minimum ratio, coefficient of variance and uniformity gradient; number of luminaries, total kilowatts, average tilt factor; light loss factor. f. Alternate manufacturers shall provide both initial and maintained light scans using a maximum 0.70 Light Loss Factor to calculate maintained values.
D	Off Field Lighting Design	Lighting design drawing showing initial vertical spill light levels along the boundary line (150' past base paths and homerun fences) in footcandles. Vertical levels shall be at 30-foot intervals along the boundary line. Readings shall be taken with the meter orientation at both horizontal and aimed towards the most intense bank lights.
E	Life Cycle Cost Calculation	Document life cycle cost calculations as defined in the specification. Identify energy costs for operating the luminaires, maintenance cost for the system including spot lamp replacement, and group relamping costs. All costs should be based on 25 years.
F	Photometric Report (glare concerns only)	Provide photometric report for a typical luminaire used showing candela tabulations as defined by IESNA Publication LM-35-02. Photometric data shall be certified by laboratory with current National Voluntary Laboratory Accreditation Program or an independent testing facility with over 5 years experience.
G	Luminaire Aiming Summary	Document showing each luminaire's aiming angle and the poles on which the luminaries are mounted. Each aiming point shall identify the type of luminaire.
H	Structural Information	Pole structural calculations and foundation design showing foundation shape, depth backfill requirements, rebar and anchor bolts (if required). Pole base reaction forces shall be shown on the foundation drawing along with soil bearing pressures. Design must be stamped by a structural engineer in the state of California.
I	Control System	Manufacturer shall provide written definition and schematics for lighting contractor cabinet(s).
J	Electrical Distribution Plans	If proposed system required a modification to the electrical distribution plan, the manufacturer must include a revised electrical distribution plan including changes to service entrance, panels and wire sizing, signed by a licensed Electrical Engineer in the state of California.

DRAFT

K	Performance Guarantee	Provide performance guarantee including a written commitment to undertake all corrections required to meet the performance requirements noted in these specifications at no expense to the owner. Light levels must be guaranteed per specification for 25 years.
L	Warranty	Provide written warranty information including all terms and conditions.
M	Project References	Manufacturer to provide a list of project references of similar projects completed within the past three years.
N	Product Information	Complete set of product brochures for all components, including a complete parts list, UL Listings, and Manufacturer's Certificate of Corrosion Protection.
O	Delivery	Manufacturer shall supply an expected delivery timeframe from receipt of approved submittals and complete order information.
P	Non-Compliance	Manufacturer shall list all items that do not comply with the specifications. If in full compliance, tab may be omitted.

I understand that the information supplied herein shall be used for the purpose of complying with the specifications for the Moore Road Ballpark Lighting project. By signing below I agree that all requirements of the specifications have been met and that the manufacturer will be responsible for any future costs incurred to bring their equipment into compliance for all items not meeting specifications and not listed in the Non-Compliance section.

Manufacturer: _____ **Signature:** _____

Contact Name: _____ **Date:** _____/_____/_____

END OF SECTION

DRAFT

V. PROPOSAL

Moore Road Ballpark Lighting

TO THE PARADISE RECREATION AND PARK DISTRICT

The undersigned declares that he/she has carefully examined the location of the proposed work, that he/she has examined the contract plans and specifications, and read the accompanying General and Special Provisions, and hereby proposed to furnish all materials and do all the work required to complete the said work in accordance with said contract plans, if any, and specifications, and General and Special Provisions, for the unit prices or lump sum set forth in the following attached schedules.

The undersigned further agrees that he/she will execute the required contract and provide the necessary bonds within eight days of his/her receipt of notice that the contract is ready for signature. If the undersigned does execute the required contract and provide the necessary bonds within the required time period, the proceeds of the Bidder's guaranty accompanying his/her bid shall become the property of the PARADISE RECREATION AND PARK DISTRICT.

In case of discrepancy between the unit price and the total set forth for a unit basis item, the unit price shall prevail, except as provided in (a) or (b), as follows:

(a) If the amount set forth as a unit price is unreadable or otherwise unclear, or is omitted, or is the same as the amount as the entry in the item total column, then the amount set forth in the item total column for the item shall prevail and shall be divided by the estimated quantity for the item and the price thus obtained shall be the unit price:

(b) (Decimal Errors) If the product of the entered unit price and the estimated quantity is exactly off by a factor of ten, one hundred, etc., or one-tenth, or one-hundredth, etc. from the entered total, the discrepancy will be resolved by using the entered unit price or item total, whichever most closely approximately percentagewise the unit price or item total in PRPD'S Final Estimate of cost. If both the unit price and the item total are unreadable or otherwise unclear, or are omitted, the bid may be deemed irregular. Likewise if the item total for a lump sum item is unreadable or otherwise unclear, or is omitted, the bid may be deemed irregular unless the project being bid has only a single item and a clear, readable total bid provided.

☐ Initial

Symbols such as commas and dollar signs will be ignored and have no mathematical significance in establishing any unit price or item total or lump sums. Written unit prices, item totals and lump sums will be interpreted according to the number of digits and, if applicable, decimal placement. Cents symbols also have no significance in establishing any unit price or item total since all such figures are assumed to be expressed in dollars and/or decimal fractions of a dollar. Bids on lump sum items shall be item totals only; if any unit price for a lump sum item is included in a bid and it differs from the item total, the items total shall prevail.

The foregoing provisions for the resolution of specific irregularities cannot be so comprehensive as to cover every omission, inconsistency, error or other irregularity which may occur in a bid. Any situation not specifically provided for will be determined in the discretion of PRPD, and such discretion will be exercised in the manner deemed by PRPD to best protect the public interest in the prompt and economical completion of the work. The decision of the PRPD respecting the amount of a bid, or the existence or treatment of an irregularity in a bid shall be final.

Town of Paradise Business License No._____

Taxpayer Identification No._____

Licensed in accordance with an act providing for the registration of contractors:

License No._____

Signature of Bidder:_____

(Check appropriate box below. State individual name or (if a firm or co-partnership), state the firm name and give names of all individual co-partners composing the firm. If a corporation, state legal name of corporation, also names of president, secretary, treasurer, and manager thereof.)

☐ Individual ☐ Corporation ☐ Co-partnership ☐ Other

Name

_____

_____

_____

Date:_____, 2021 Business Address

_____

_____

(Zip Code)

Phone No._____

☐ Initial

Moore Road Ballpark Lighting

LIST OF SUBCONTRACTORS
FOR CONTRACTOR_____

SUBCONTRACTORS NAME	ADDRESS & TELEPHONE #	RESPONSIBLE FOR CONTRACT ITEM #	DOLLAR AMOUNT OF SUBCONTRACT WORK

CONTRACTOR'S PROPOSAL FORM - Moore Road Ballpark Lighting (One field)

ITEM	DESCRIPTION	QUANITY	UNIT	UNIT PRICE	TOTAL PRICE
BASE BID – METAL POLES					
1	CLEARING GRUBING AND DEMOLITION	1	LS		
2	ELECTRICAL WORK	1	LS		
3	STADIUM FLOODLIGHTING	1	LS		

TOTAL = _____

ADD ALTERNATE 1					
4	AREA LIGHTING PER SHEET E1.2 – (Additive)	1	LS		

TOTAL = _____

ADD ALTERNATE 2					
5	25 YEAR MAINTENANCE WARRANTY FOR FLOODLIGHTING WITH METAL POLES – (Additive)	1	LS		

TOTAL = _____

Paradise Recreation and Park District staff will be responsible for installing the main switchboard and distribution center pad and for trenching and installing all underground conduits from the service pad to the points of utilization.

CONTRACTOR DATA SHEET

(Please type or print clearly in ink only)

*******TO BE COMPLETED BY BIDDER AND SUBMITTED WITH BID*******

QUALIFICATIONS OF BIDDER: The bidder shall have the capability and capacity in all respects to fulfill the contractual requirements to the satisfaction of PRPD.

Indicate the length of time you have been in business as a company providing the type of service required for this contract.

_____years _____months

Provide a minimum of three (3) references that may substantiate past work performance and experience in the type of work required for this contract.

Name, Address, Phone Number, Scope of Services Performed and Contact Person.

1._____

2._____

3._____

VI . CONTRACT

PARADISE RECREATION AND PARK DISTRICT
CONTRACT – ENGINEERING PROJECT

PRPD / _____
CONTRACTOR

MOORE ROAD BALLPARK LIGHTING
(Project Title)

THIS CONTRACT is executed this _____ day of _____, 2021, between the PARADISE RECREATION AND PARK DISTRICT, hereinafter called "PRPD", and _____, a(n) (individual), (partnership), (corporation), (enter as appropriate), hereinafter called "Contractor."

ARTICLE I – WITNESSETH, that for and in consideration of the payments and agreements hereinafter mentioned, to be made and performed by PRPD, Contractor hereby agrees to, at its own proper cost and expense, do all the work and furnish all labor and materials necessary to complete in a good, workmanlike substantial manner, the public work indicated above and described in the documents listed below and made a part of this Contract by reference thereto, and the same as though set forth herein. Said documents are more fully described as follows:

1. NOTICE TO CONTRACTORS
2. GENERAL PROVISIONS
3. SPECIAL PROVISIONS
4. TECHNICAL SPECIFICATIONS
5. PROPOSAL dated_____
6. CONTRACT PLANS entitled Moore Road Ballpark Lighting Plans

Said public work is located at 6705 Moore Road, Town of Paradise, County of Butte, State of California.

A requirement shown in any of said documents is as binding as though occurring in all. They are intended to be coordinated and to describe and provide for a complete work. Should it appear that the work to be done or any of the matters relative thereto are not sufficiently explained in said documents or should any of said documents appear to be conflicting, the Contractor shall apply to the PRPD for such further explanation as may be necessary, and shall conform to them as part of the Contract. The decisions of the PRPD as to the true meaning of any of said documents shall be final.

The work shall be performed in accordance with the directions and specifications set forth in the above named documents and also in accordance with the following specifications entitled:

1. STATE OF CALIFORNIA, DEPARTMENT OF TRANSPORTATION, STANDARD SPECIFICATIONS, May 2006

Said specifications are hereby specifically referred to and by such reference made a part hereof.

ARTICLE II – Contractor agrees to receive and accept the prices set forth in Exhibit "A" (Contractors Proposal Form) attached hereto and by reference incorporated herein as full compensation for furnishing all labor and materials and doing all the work contemplated and embraced in this Contract; also for all loss or damage arising out of the nature of the work aforesaid, or from the action of the elements, or from any unforeseen difficulties or obstruction which may arise or be encountered in prosecution of the work connected with the work; also for all expenses incurred or in consequence if the suspension or discontinuance of work, and for well and faithfully completing the work, and the whole thereof, in the manner and according to the plans and specifications and the requirements of the Engineering under them.

ARTICLE III – PRPD hereby promises and agrees with Contractor to employ, and does hereby employ, Contractor to provide the labor and materials and to do the public work according to the terms and conditions herein contained and referred to for the prices aforesaid, and hereby contracts to pay the same at the time, in the manner, and upon the conditions in said GENERAL PROVISIONS, SPECIAL PROVISIONS, PROPOSAL, and SPECIFICATIONS as above set forth; and the said parties, for

themselves, their heirs, executors, administrators, successors, and assigns, do hereby agree to the full performance of the covenant herein contained.

ARTICLE IV – It is further expressly agreed by and between the parties hereto that should there be any conflict between the terms of this instrument and the bid or proposal of said Contract, then this instrument shall control, and nothing herein shall be considered as acceptance of the said terms of said proposal conflicting herewith.

IN WITNESS WHEREOF, the parties hereto have executed these presents in the day and year first above written.

_____	PARADISE RECREATION AND PARK DISTRICT
CONTRACTOR	
_____	_____
ADDRESS	BY: Daniel S Efseaff, District Manager
_____	_____
CITY / STATE / ZIP	DATE:

BY:_____
Signature

_____
TITLE

DATE:_____

_____
CONTRACTOR'S LICENSE NO.

ADDENDUM A

SHEET INDEX

CVR–1	COVER SHEET
E0.1	SYMBOLS, NOTES AND DETAILS
E1.0	SITE PLAN – DEMOLITION
E1.1	SITE PLAN – ELECTRICAL
E1.3	DETAILS

APPLICABLE CODES

CONSTRUCTION SHALL COMPLY WITH THE FOLLOWING CODES AND STANDARDS.

NFPA 13, 2010 EDITION & NFPA 72, 2010 EDITION
TITLE 19, CCR, PUBLIC SAFETY, STATE FIRE MARSHALL REGULATIONS
TITLE 24, CCR, PART 1, 2010 CALIFORNIA BUILDING STANDARDS ADMINISTRATION CODE
TITLE 24, CCR, PART 2, 2010 CALIFORNIA BUILDING CODE
TITLE 24, CCR, PART 3, 2010 CALIFORNIA ELECTRIC CODE
TITLE 24, CCR, PART 9, 2010 CALIFORNIA FIRE CODE

THE CONTRACTOR SHALL KEEP TITLE 24, CCR, PART 1, 2, 3, & 9 ON THE BUILDING SITE AT ALL TIMES.

GENERAL NOTES

1) CHANGE ORDERS SHALL BE SIGNED BY THE ENGINEER, OWNER, AND AUTHORITY HAVING JURISDICTION (AHJ)

2) ADDENDA SHALL BE SIGNED BY THE ENGINEER AND APPROVED BY AHJ.

3) SUBSTITUTIONS SHALL BE CONSIDERED AS A CHANGE ORDER AND BE APPROVED BY AHJ BEFORE FABRICATION OR USE.

4) INSPECTOR SHALL BE EMPLOYED BY THE DISTRICT AND APPROVED BY THE ENGINNER AND AHJ.

5) THE INTENT OF THESE DRAWING AND SPECIFICATIONS IS THAT THE WORK OF THE ALTERATION, REHABILITATION, OR RECONSTRUCTION IS TO BE IN ACCORDANCE WITH TITLE 24, CALIFORNIA CODE OF REGULATIONS. SHOULD ANY EXISTING CONDITIONS SUCH AS DETERIORATION, OR NON–COMPLYING CONSTRUCTION BE DISCOVERED WHICH IS NOT COVERED BY THE CONTRACT DOCUMENTS WHEREIN THE FINISHED WORK WILL NOT COMPLY WITH TITLE 24, CALIFORNIA COED OF REGULATIONS, A CHANGE ORDER, OR A SEPARATE SET OF PLANS AND SPECIFICATIONS, DETAILING AND SPECIFYING THE REQUIRED WORK SHALL BE SUBMITTED TO AND APPROVED BY AHJ BEFORE PROCEEDING WITH THE WORK.

SCOPE OF WORK

1. NEW BALLPARK FLOODLIGHTING

DESIGN TEAM

ELECTRICAL ENGINEER:
CHARLES A. MARTIN AND ASSOCIATES
2730 C ST SACRAMENTO, CA 95816

CONTACT: JEFF JOHANSON
OFFICE: (916) 442–0416
FAX: (916) 442–1309

OWNER

Owner: Paradise Recreation and Park District 6626 Skyway, Paradise, CA 95969	Contact: Dan Efseaff, District Manager Office: 530-872-6393

DEFERRED APPROVALS

NONE

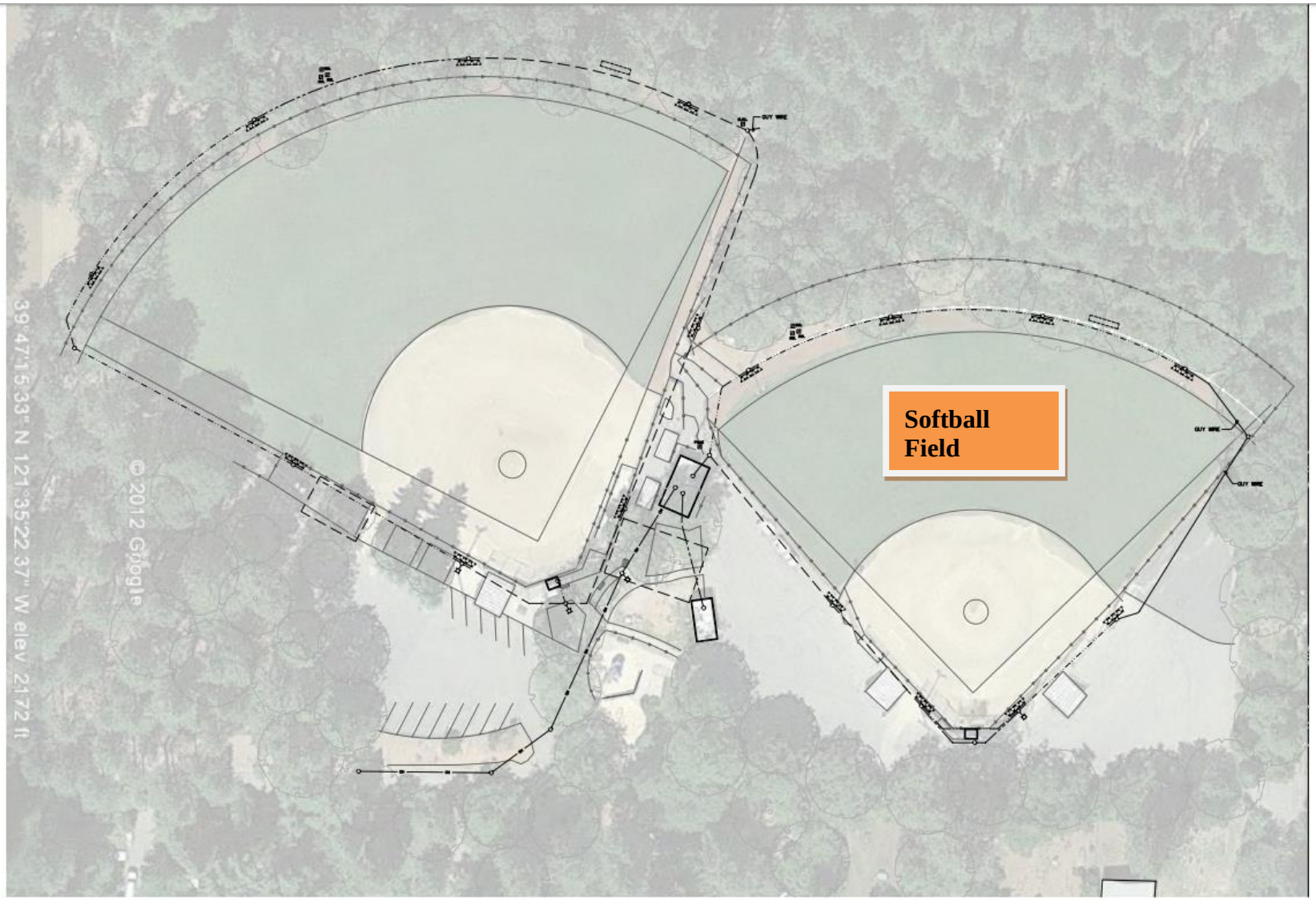

SITE PLAN - DEMOLITION

APPROXIMATE SCALE: 1" = 30'-0"

CHARLES A. MARTIN AND ASSOCIATES
CONSULTING ELECTRICAL ENGINEERS
2730 C Street, Sacramento, CA 95816-3215, tel 916-442-0416

REGISTERED PROFESSIONAL ENGINEER
WAYNE J. VAN ZANDT
No. E15483
Exp. 6/30/13
ELECTRICAL
STATE OF CALIFORNIA

IDENTIFICATION STAMP
DIV. OF THE STATE ARCHITECT
OFFICE OF REGULATION SERVICES
APPL NO.
AC. FLS. DS.
DATE

PARADISE RECREATION AND PARK DISTRICT
MOORE ROAD BALLPARK LIGHTING

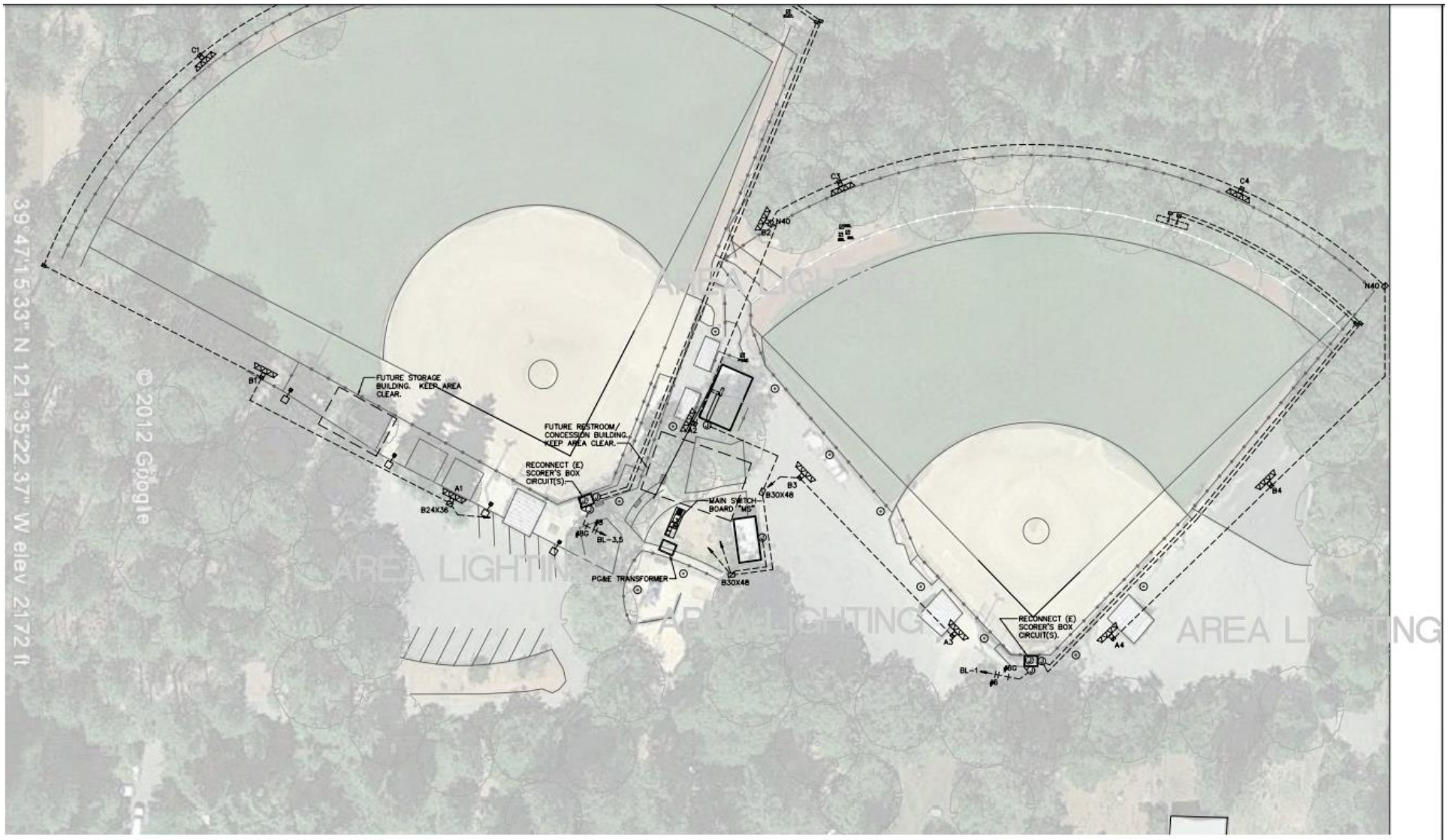

SITE PLAN - ELECTRICAL

PANEL	TYPE	MAINS	BUS	VOLTAGE	Ø	W	FLUSH		SPECIAL
BL	*	BRKR	600A	208Y/120V	3	4	SURF	X	* REFER TO ELEVATION
							W= *		

SERVING	C.B.	#	POLES	#	C.B.	SERVING
FIELD 1 SCORER'S BOX	20/1	1	1 2		20/1	SPARE
FIELD 2 SCORER'S BOX (LTS & RECEPTACLES)		3	3 4			
FIELD 2 SCORER'S BOX (SCOREBOARD)		5	5 6			
"OLCC"		7	7 8			
"CC-B"		9	9 10			
(E) CONCESSIONS PANEL	100/2	11	11 12			
			13 14			
(E) CONCESSIONS PANEL	600/2	15	15 16			
			17 18			
SPACE	PFB		19 20			
			21 22			
			23 24			
			25 26			
			27 28			
			29 30			

MAIN SWITCHBOARD "MS"

SERVICE: 480Y/277, 3ø, 4W BUSSING: 600 AMPS

NO.	BREAKER FRAME	BREAKER TRIP	NAMEPLATE	FEEDER CONDUCTORS	FEEDER CONDUIT
①	_/3	600A	MAIN	BY PG&E	(2) 5"C.O.
②	_/3	45A	POLES A1 AND B1	SEE ONE LINE	SEE ONE LINE
③	_/3	30A	POLES A3 AND B3		
④	_/3	40A	POLES C1 AND C2		
⑤	_/3	30A	POLES C3 AND C4		
⑥	_/3	45A	POLES A2 AND B2		
⑦	_/3	30A	POLES A4 AND B4		
⑧	_/3	350A	TRANSFORMER "TB"		
⑨	_/2	30A	AREA LIGHTING		
⑩	_/3	PFB	SPACE		
⑪	_/3	PFB	SPACE		
⑫	_/3	PFB	SPACE		
⑬	_/3	PFB	SPACE		

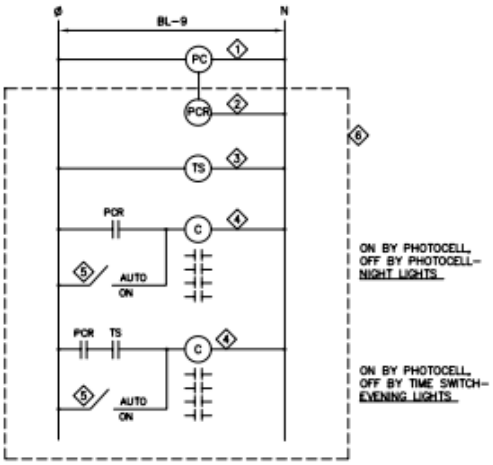

1. PHOTO CONTROL – TORK 2100. INSTALL ON TOP OF CABINET. PROVIDE PROTECTIVE GUARD.
2. PHOTO CONTROL RELAY – ALLEN BRADLEY #700-HG SERIES.
3. TIME SWITCH – TORK W300L WITH SPRING WOUND RESERVE POWER AND NEMA 1 ENCLOSURE. PROVIDE NAMEPLATE: "EVENING LIGHTS".
4. LIGHTING CONTACTOR – SQUARE D, CLASS 8903, ELECTRICALLY HELD, WITH POLES AS SHOWN.
5. BYPASS SWITCH – ALLEN BRADLEY #800H-HR2 SERIES, 2 POSITION, MAINTAINED CONTACTS, BLACK WITH LEGEND PLATE MARKED "AUTO" AND "ON". PROVIDE NAMEPLATES: "NIGHT LIGHTS" AND "EVENING LIGHTS". MOUNT SWITCH ON OLCC DOOR.
6. OUTSIDE LIGHTING CONTROL CABINET "OLCC", REFER TO ELEVATION. PROVIDE BARRIERS OVER ALL TERMINALS.

OUTSIDE LIGHTING CONTROL DIAGRAM

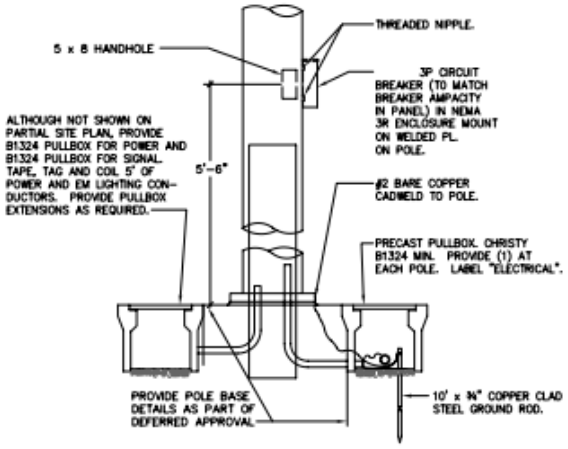

NOTE: INCLUDE PRECAST CONCRETE BASES AND FOUNDATIONS IN BID.

DETAIL - POLE BASE AT STADIUM FLOODLIGHT

NO SCALE

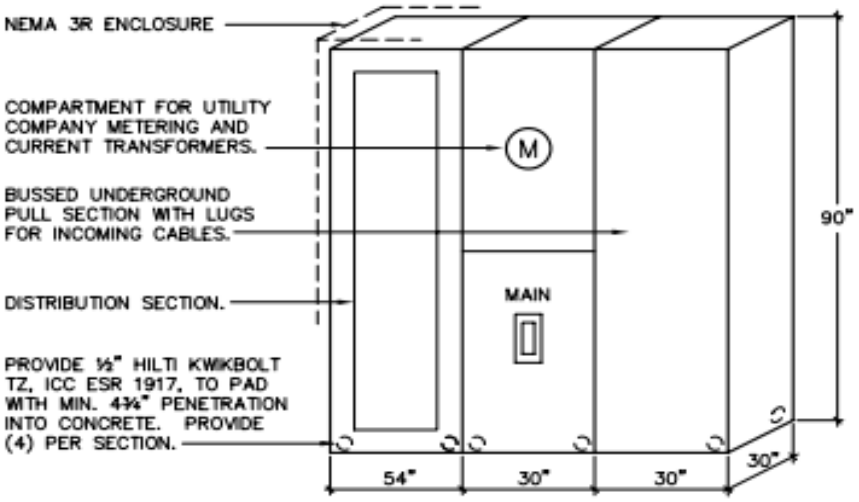

NOTES:
1. DIMENSIONS MAY VARY. CONTRACTOR SHALL USE ACTUAL DIMENSIONS OF EQUIPMENT BEING PROVIDED FOR LAYOUT AND CLEARANCES.
2. PROVIDE STAINLESS STEEL OR GALVANIZED ANCHORS.
3. 50% OF KWIKBOLT TZ ANCHORS MUST BE PULL TESTED TO 2,000 LBS.
4. CONTRACTOR SHALL PROVIDE SWITCHBOARD SECTIONS AS SHOWN. SUBMITTALS PROPOSING FEWER SECTIONS WILL BE RETURNED WITHOUT REVIEW.

ELEVATION - MAIN SWITCHBOARD "MS"

NO SCALE

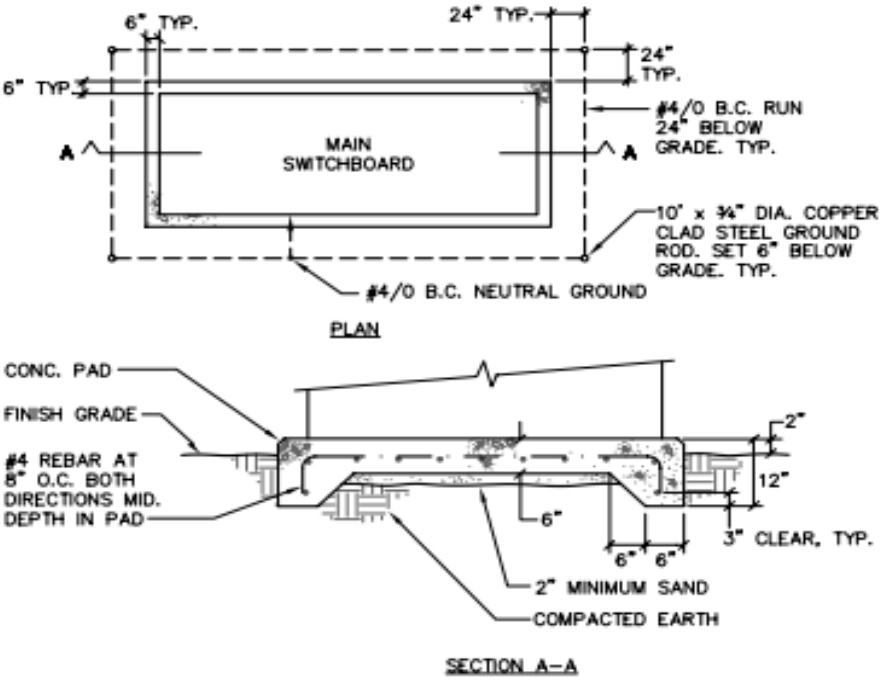

DETAIL - MAIN SWITCHBOARD PAD

NO SCALE

OUTSIDE LIGHTING CONTROL DIAGRAM

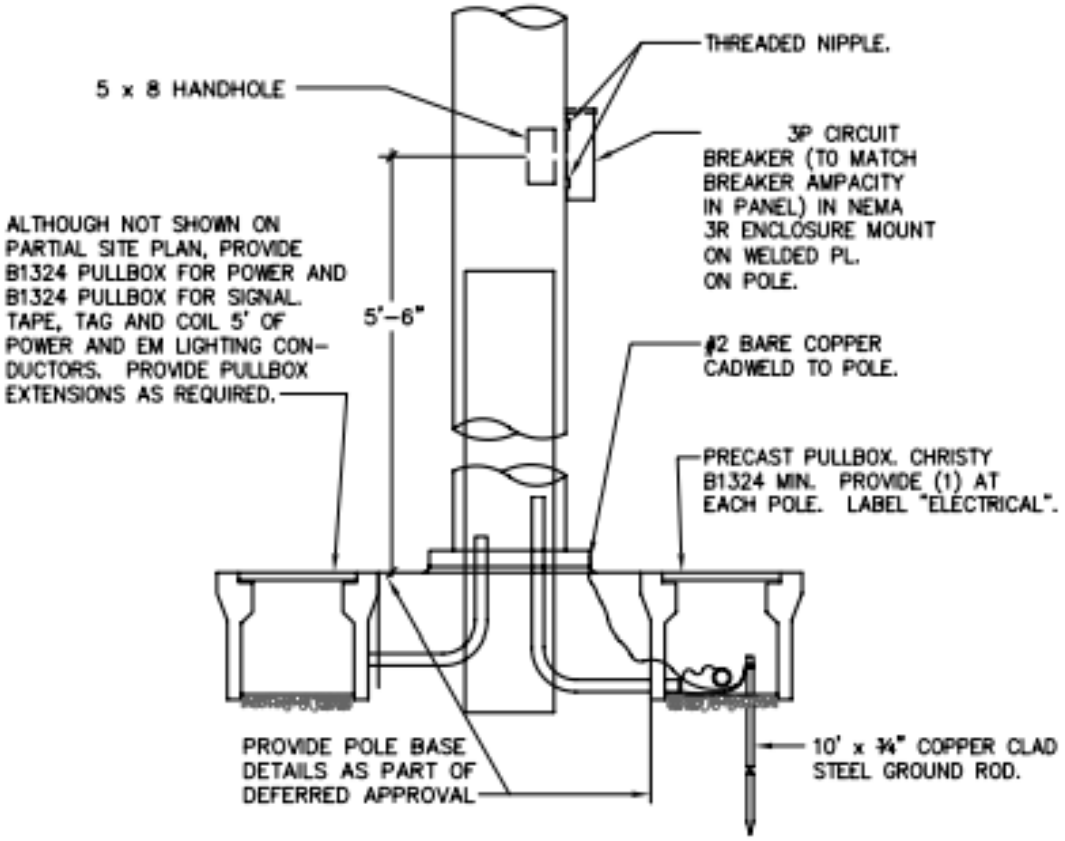

NOTE: INCLUDE PRECAST CONCRETE BASES AND FOUNDATIONS IN BID.

DETAIL - POLE BASE AT STADIUM FLOODLIGHT

NO SCALE

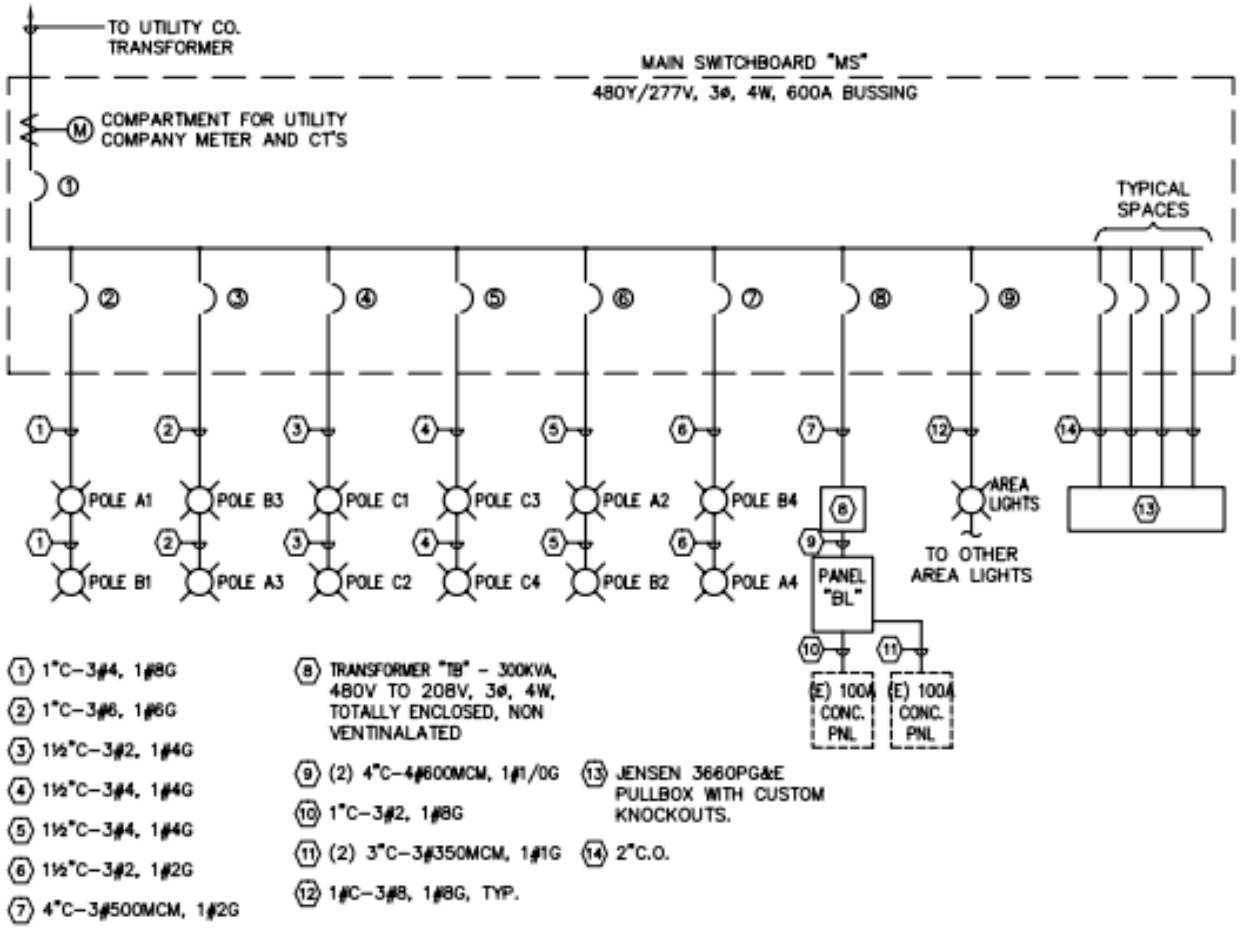

NOTES: 1. SOME FEEDERS ARE OVERSIZED FOR VOLTAGE DROP.
2. CONDUITS ARE ROUTED THROUGH PULLBOXES NOT SHOWN ON DIAGRAM. REFER TO SITE PLAN FOR PULLBOX LOCATIONS.

ONE LINE DIAGRAM - POWER DISTRIBUTION

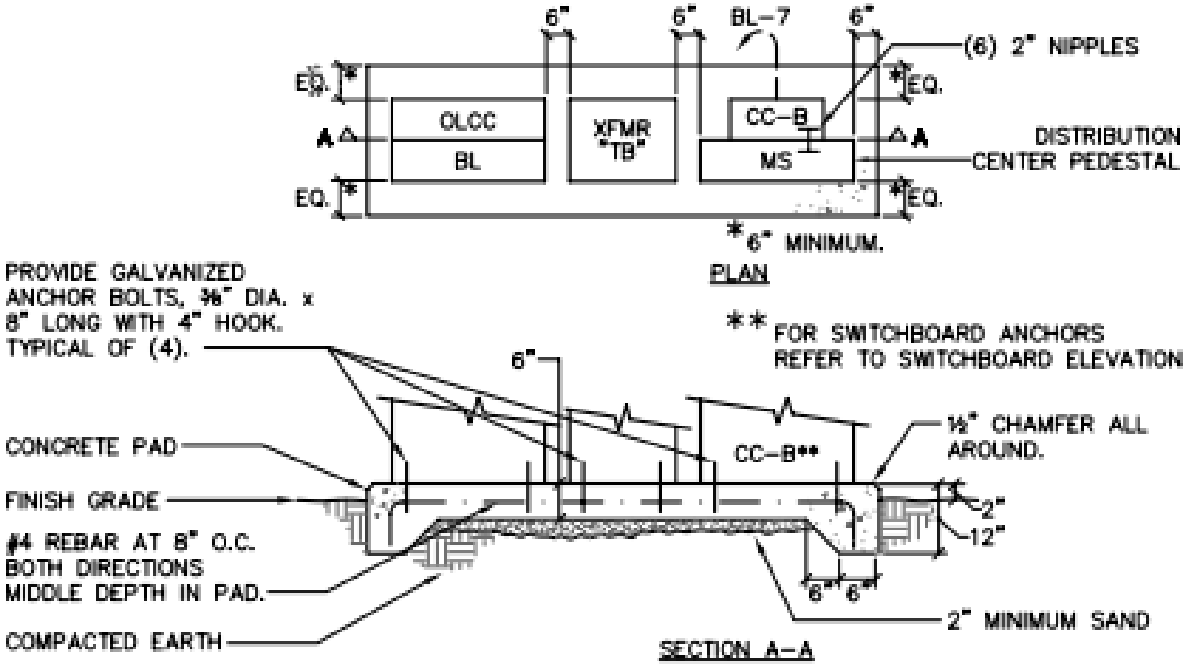

NO SCALE

DETAIL - DISTRIBUTION CENTER PAD "DCB"

NO SCALE